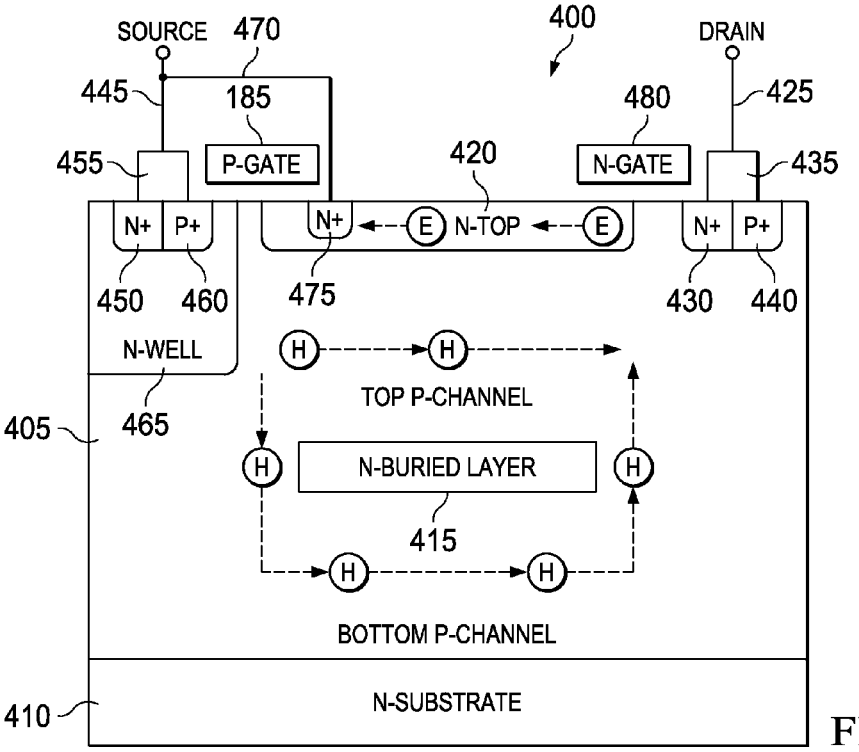
400
SOURCE
470
DRAIN
445
185
480
425
455
P-GATE
420
N-GATE
435
N+
P+
N+
E
N-TOP
E
N+
P+
450
460
475
430
440
N-WELL
H
H
TOP P-CHANNEL
405
465
H
N-BURIED LAYER
H
415
H
H
BOTTOM P-CHANNEL
N-SUBSTRATE
410

FIG. 4

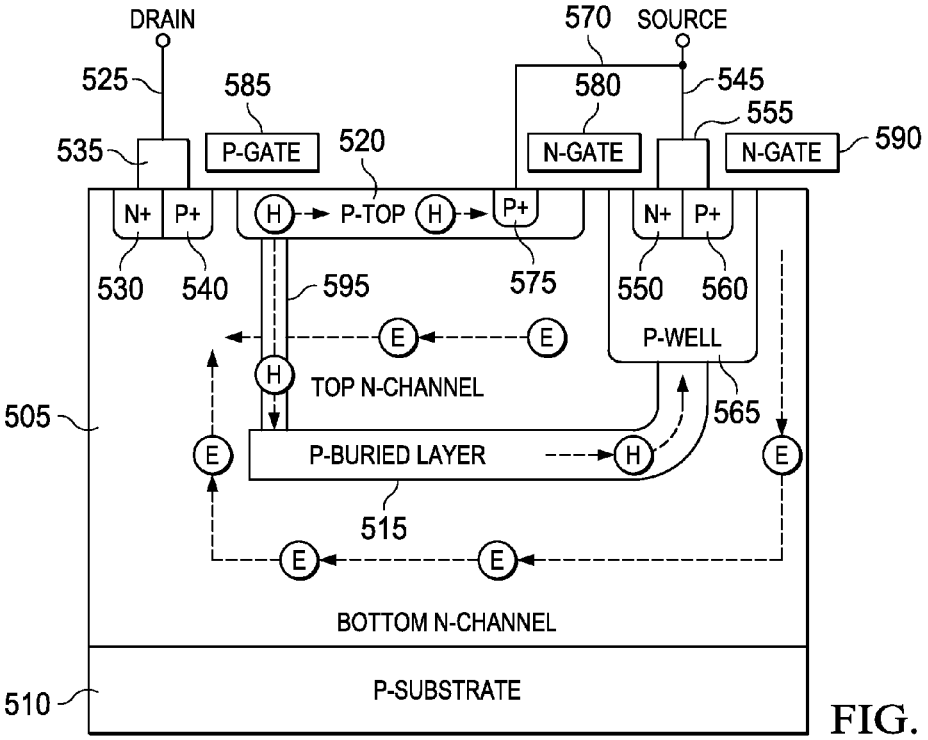
DRAIN
570
SOURCE
525
585
580
545
555
535
P-GATE
520
N-GATE
N-GATE
590
N+
P+
H
P-TOP
H
P+
N+
P+
530
540
595
575
550
560
E
E
P-WELL
H
TOP N-CHANNEL
505
565
E
P-BURIED LAYER
H
E
515
E
E
BOTTOM N-CHANNEL
P-SUBSTRATE
510

FIG. 5