US006038399A

United States Patent [19]

Fisher et al.

[11] **Patent Number: 6,038,399**

[45] **Date of Patent: Mar. 14, 2000**

[54] **COMPUTER MANUFACTURING ARCHITECTURE WITH TWO DATA-LOADING PROCESSES**

[75] Inventors: **Jerald C. Fisher**, Tomball; **Lien Dai Nguyen**; **James Young**, both of Houston; **Gunnar P. Seaburg**, The Woodlands; **Galen W. Hedlund**, Tomball; **Richard S. Katz**, Spring, all of Tex.

[73] Assignee: **Compaq Computer Corporation**, Houston, Tex.

[21] Appl. No.: **09/070,603**

[22] Filed: **Apr. 30, 1998**

Related U.S. Application Data

[60] Provisional application No. 60/053,455, Jul. 22, 1997.

[51] **Int. Cl.**[7] **G06F 9/445**

[52] **U.S. Cl.** **395/712**; 713/1

[58] **Field of Search** 395/200.33, 200.47, 395/200.48, 200.49, 200.5, 200.51, 200.52, 200.53, 200.54, 712, 500; 713/1, 100, 101; 711/113, 114, 156, 162, 168, 173; 714/44, 5, 6, 7, 8; 707/1, 10, 100

[56] **References Cited**

U.S. PATENT DOCUMENTS

5,388,211	2/1995	Hornbuckle	395/712
5,668,995	9/1997	Bhat	395/674
5,713,009	1/1998	DeRosa, Jr. et al.	395/500
5,717,930	2/1998	Imai et al.	395/712
5,727,144	3/1998	Brady et al.	714/57
5,745,765	4/1998	Paseman	395/701
5,787,491	7/1998	Merkin et al.	711/173
5,794,032	8/1998	Leyda	395/712
5,794,052	8/1999	Harding	395/712
5,809,516	9/1998	Ukai et al.	711/114
5,850,539	12/1998	Cook et al.	395/500

OTHER PUBLICATIONS

Bournellis, Cynthia and McAleer, Bernard, "Build–to–Order Program Is Launched by Compaq", Electronic Times, Jul. 14, 1997, 2 pages.

Wall Street Journal, Jul. 10, 1997, Compaq advertisement, 8 pages.

"Innovative Software announces Ghost Software Version 4.0—The NextGeneration in Workstation Cloning", PR NewsWire, Nov. 1997, pp. 1–3.

Usher, "Build–To–Order Priciples can Solve Software–Loading Dilemma", Electronic Buyers News, Mar. 1996, start p. 55.

Primary Examiner—Tariq R. Hafiz
Assistant Examiner—Kakali Chaki
Attorney, Agent, or Firm—Robert Groover

[57] **ABSTRACT**

A computer manufacturing architecture in which a single software database feeds both direct downloading and surrogate downloading through a common network.
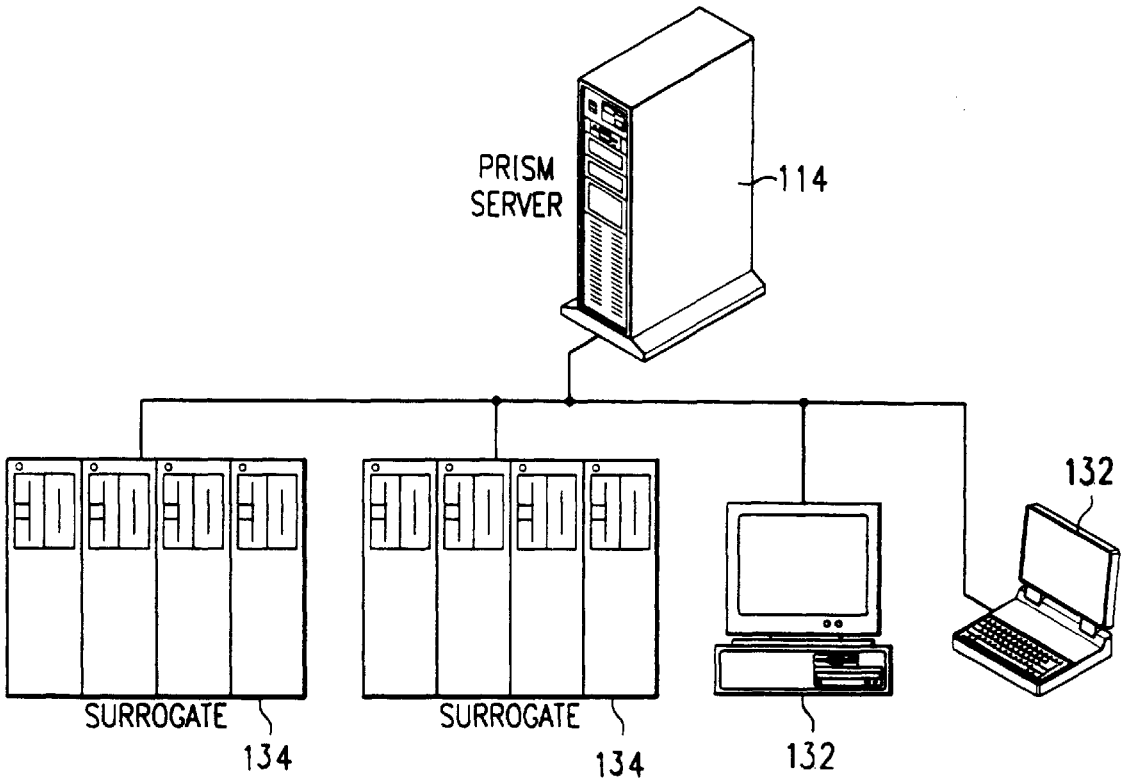
27 Claims, 18 Drawing Sheets