350-96.13 SR
12/5/78 OR 4,128,299

United States Patent [19]

Maher

[11] **4,128,299**

[45] **Dec. 5, 1978**

[54] **WAVEGUIDE OPTICAL MODULATOR**

[75] Inventor: **James Maher**, Sodus, N.Y.

[73] Assignee: **Xerox Corporation**, Stamford, Conn.

[21] Appl. No.: **796,262**

[22] Filed: **May 12, 1977**

[51] **Int. Cl.**[2] **G02B 5/14**; G02F 1/29

[52] **U.S. Cl.** **350/96.13**; 350/359

[58] **Field of Search** 350/359, 360, 96.29, 350/96.12, 96.13, 336

[56] **References Cited**

U.S. PATENT DOCUMENTS

3,625,589	12/1971	Snitzer	350/96.29
3,704,060	11/1972	McNaney	350/336
3,802,760	4/1974	Sosnowski	350/96.13
3,804,489	4/1974	Li et al.	350/356
3,856,378	12/1974	Brandt et al.	350/96.13

OTHER PUBLICATIONS

Maher, J., Schank, R. L., Pfiser, C., "Elastomeric Optical Waveguide Modulators," Applied Phys. Lett., vol. 29, No. 5, Sept. 1976, pp. 293–295.

Primary Examiner—John K. Corbin
Assistant Examiner—Rolf Hille

[57] **ABSTRACT**

Light propagating in a waveguide is modulated by deforming a cladding on at least one surface of the waveguide. The cladding has a thickness at least equal to the exponential depth of the evanescant field of the propagating light. A pair of electrode means is used to impress a field across the waveguide and cladding so that the cladding is deformed to a degree sufficient to interfere with the evanescant field and to modulate the propagating light.
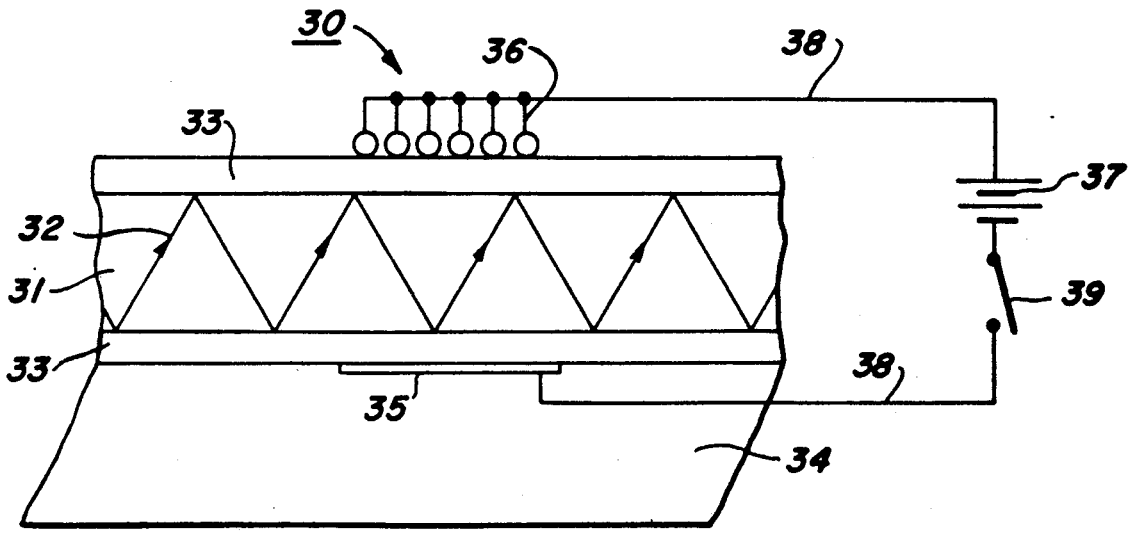
16 Claims, 5 Drawing Figures