PAINT ROLLER AND METHOD OF MAKING SAME

Filed June 1, 1965

3 Sheets-Sheet 2

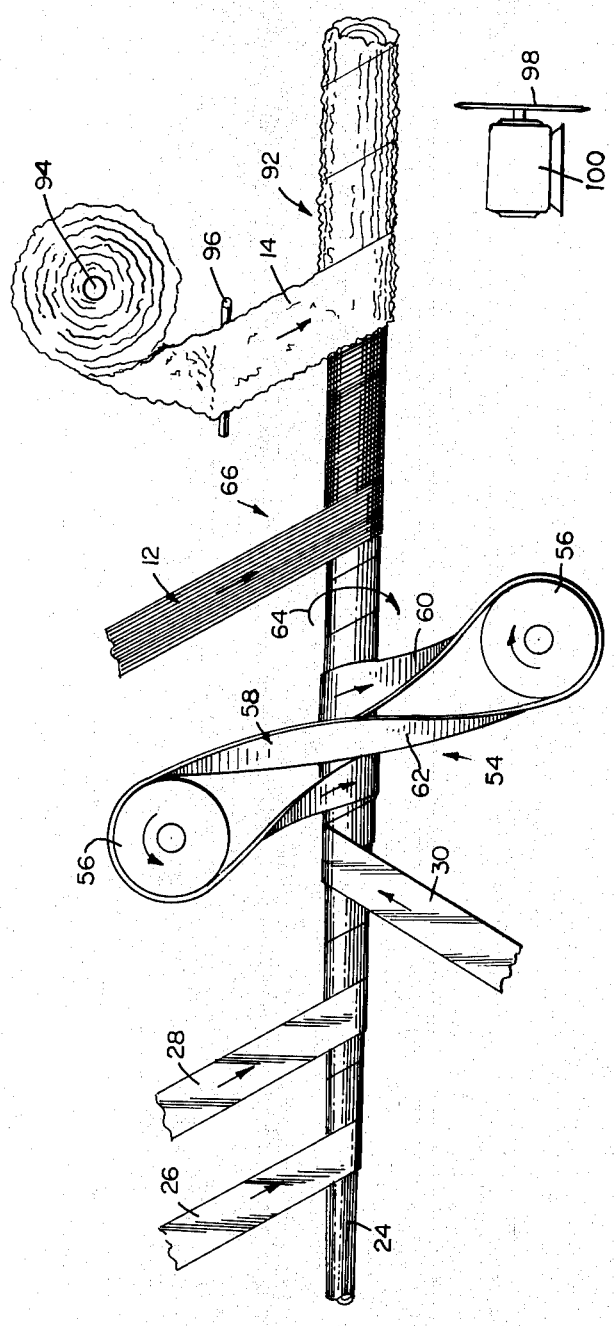

FIG. 3

INVENTORS
Sidney L. Grodberg,
BY, Arthur D. Howard
Wolf, Greenfield & Hieken
ATTORNEYS