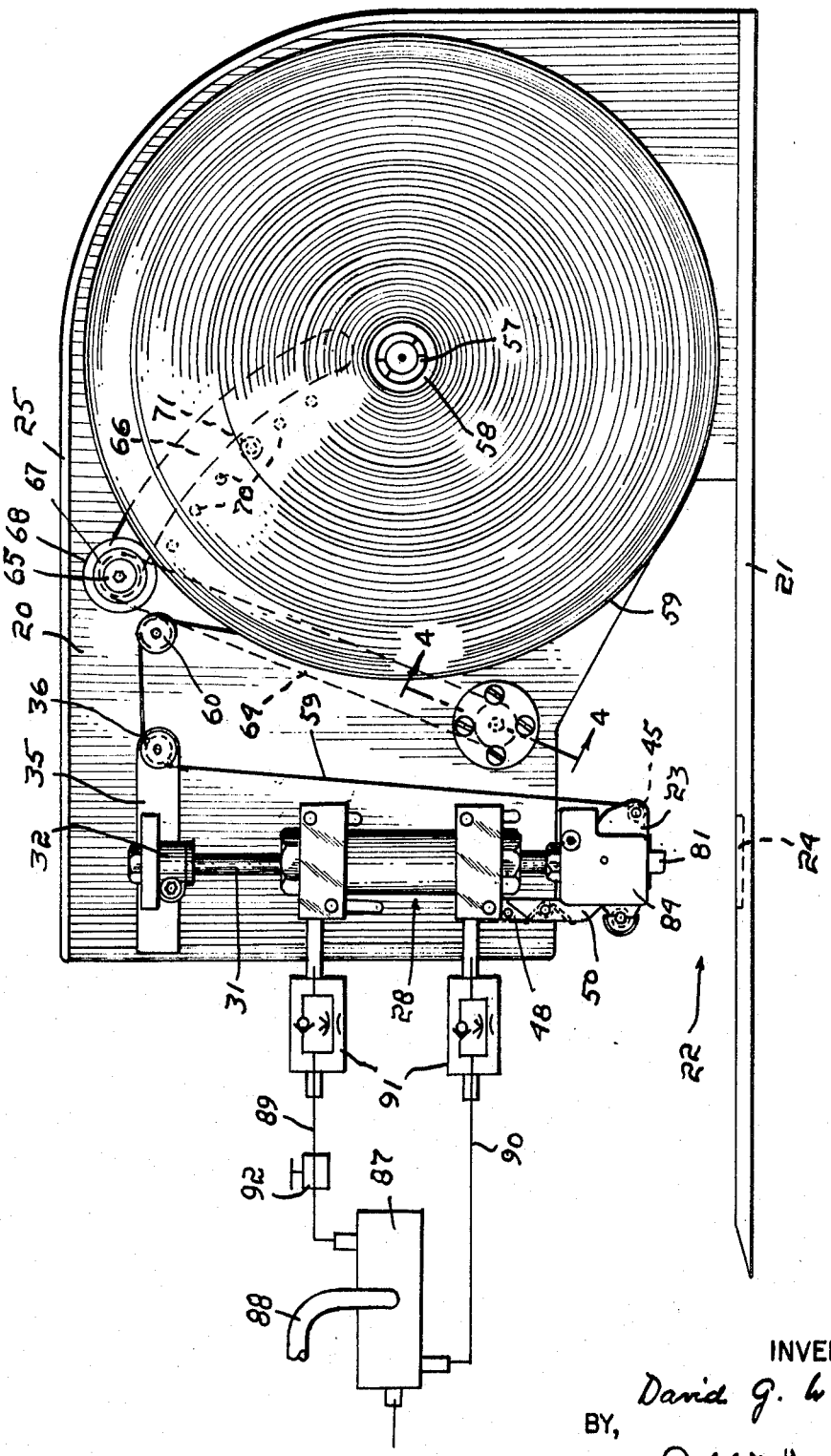

FIG. 1

INVENTOR
David G. Way
BY,
Albert Spear,
ATTORNEY