US008425599B2

(12) **United States Patent**
Shadduck

(10) **Patent No.: US 8,425,599 B2**
(45) **Date of Patent: *Apr. 23, 2013**

(54) **ACCOMMODATING INTRAOCULAR LENSES AND METHODS OF USE**

(75) Inventor: **John H. Shadduck**, Menlo Park, CA (US)

(73) Assignee: **PowerVision, Inc.**, Belmont, CA (US)

(*) Notice: Subject to any disclaimer, the term of this patent is extended or adjusted under 35 U.S.C. 154(b) by 0 days.

This patent is subject to a terminal disclaimer.

(21) Appl. No.: **13/300,245**

(22) Filed: **Nov. 18, 2011**

(65) **Prior Publication Data**

US 2012/0078361 A1 Mar. 29, 2012

Related U.S. Application Data

(63) Continuation of application No. 12/782,644, filed on May 18, 2010, which is a continuation of application No. 10/358,038, filed on Feb. 3, 2003, now Pat. No. 8,048,155.

(60) Provisional application No. 60/353,847, filed on Feb. 2, 2002, provisional application No. 60/362,303, filed on Mar. 6, 2002, provisional application No. 60/378,600, filed on May 7, 2002, provisional application No. 60/405, 471, filed on Aug. 23, 2002, provisional application No. 60/408,019, filed on Sep. 3, 2002, provisional application No. 60/431,110, filed on Dec. 4, 2002.

(51) **Int. Cl.**
A61F 2/16 (2006.01)

(52) **U.S. Cl.**
USPC **623/6.37**; 623/6.13; 623/6.4

(58) **Field of Classification Search** 623/6.31, 623/6.13, 6.22, 6.37, 6.34, 6.4, 6.43, 6.5, 623/6.59
See application file for complete search history.

(56) **References Cited**

U.S. PATENT DOCUMENTS

4,111,995	A	9/1978	Nelson
4,253,199	A	3/1981	Banko
4,254,509	A	3/1981	Tennant
4,304,895	A	12/1981	Loshaek
4,373,218	A	2/1983	Schachar
4,409,691	A	10/1983	Levy
4,423,809	A	1/1984	Mazzocco
4,435,856	A	3/1984	L'Esperance
4,466,705	A	8/1984	Michelson
4,490,860	A	1/1985	Rainin
4,494,254	A	1/1985	Lopez
4,512,040	A	4/1985	McClure
4,528,311	A	7/1985	Beard et al.

(Continued)

FOREIGN PATENT DOCUMENTS

EP	0898972 A2	3/1999
FR	2784575	4/2000

(Continued)

OTHER PUBLICATIONS

Scholl et al.; U.S. Appl. No. 13/193,487 entitled "Accommodating Intraocular Lenses," filed Jul. 28, 2011.

(Continued)

Primary Examiner — Paul Prebilic
(74) *Attorney, Agent, or Firm* — Shay Glenn LLP

(57) **ABSTRACT**

Fluid-driven accommodating intraocular lenses comprising deformable optic portions.
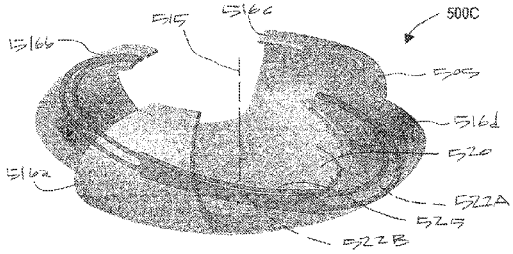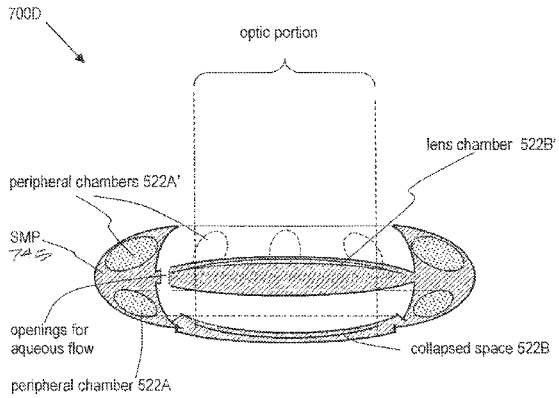
12 Claims, 31 Drawing Sheets