June 13, 1967 J. J. BROST 3,324,599

TELESCOPING ALUMINUM FRAME

Filed May 6, 1965 5 Sheets-Sheet 1

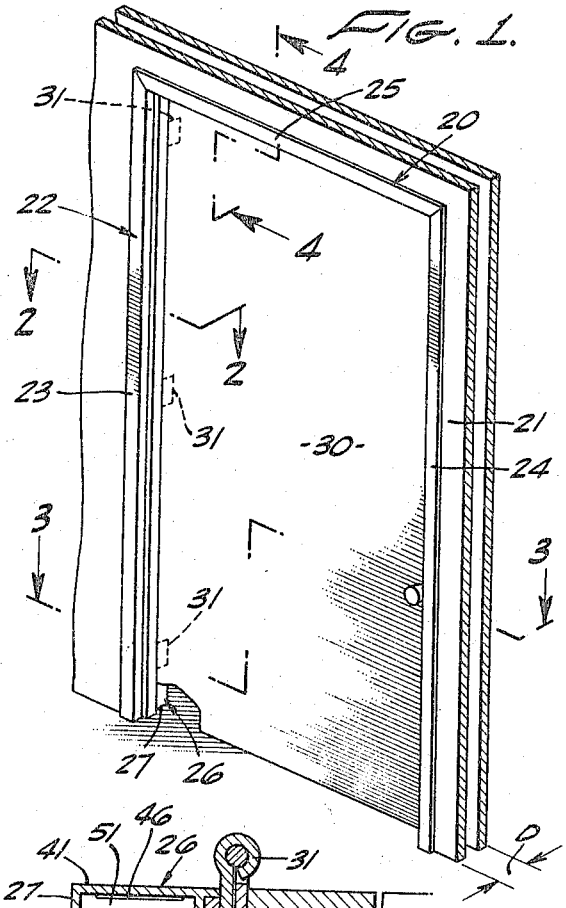

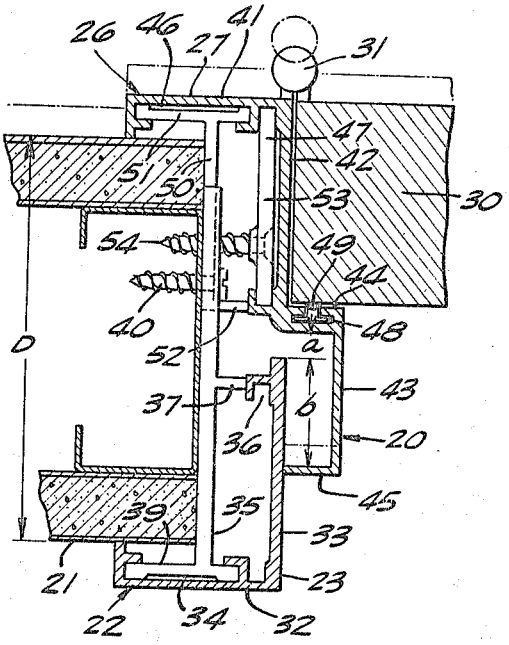

FIG. 2.

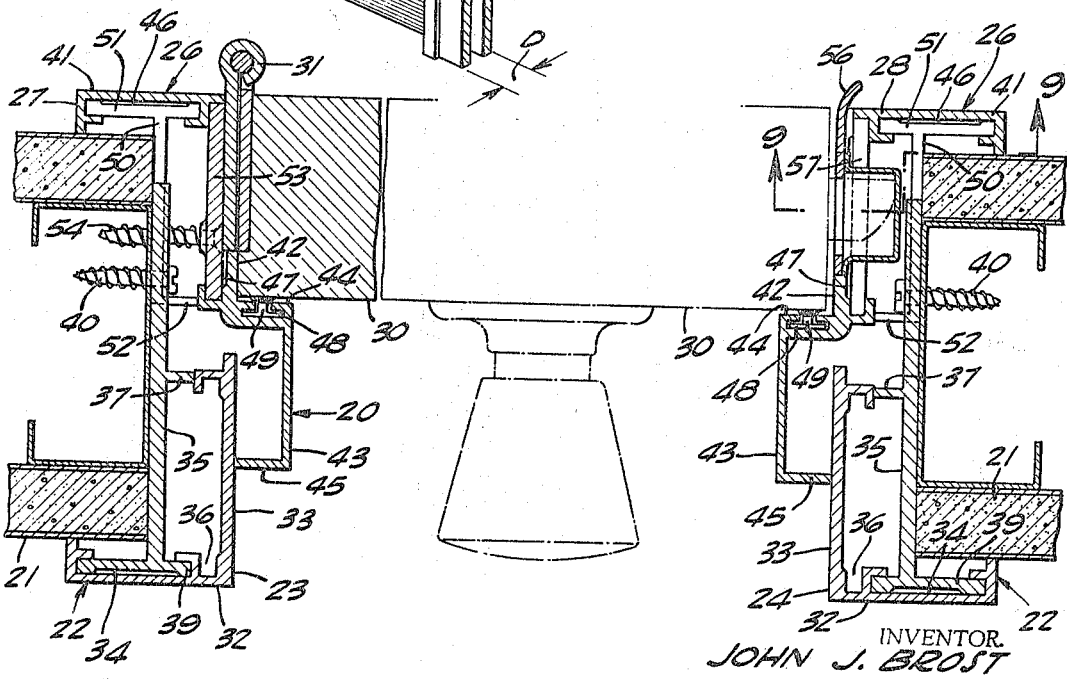

FIG. 3.

INVENTOR.
JOHN J. BROST

BY

Beehler & Arant
ATTORNEYS