US00D820399S

(12) United States Design Patent

Garland

(10) Patent No.: US D820,399 S

(45) Date of Patent: ** Jun. 12, 2018

(54) **FAUCET**

(71) Applicant: **DELTA FAUCET COMPANY**, Indianapolis, IN (US)

(72) Inventor: **Celine Kwok Garland**, Zionsville, IN (US)

(73) Assignee: **DELTA FAUCET COMPANY**, Indianapolis, IN (US)

(**) Term: **15 Years**

(21) Appl. No.: **29/595,243**

(22) Filed: **Feb. 27, 2017**

(51) **LOC (11) Cl.** **23-01**

(52) **U.S. Cl.**
USPC **D23/238**

(58) **Field of Classification Search**
USPC D23/238, 241–243, 249–250, 252, D23/254–255, 257; D8/307–308
CPC Y10T 137/9464
See application file for complete search history.

(56) **References Cited**

U.S. PATENT DOCUMENTS

D460,160 S * 7/2002 Singtoroj D23/252
D488,539 S * 4/2004 McKeone D23/255
D515,671 S * 2/2006 Toyohara D23/241
D613,824 S * 4/2010 Sofield D23/252
D615,627 S * 5/2010 Sofield D23/252
D640,353 S * 6/2011 Gao D23/255
D648,003 S * 11/2011 Gao D23/255
D648,829 S * 11/2011 Gao D23/252
D785,436 S * 5/2017 Carlino D8/308

* cited by examiner

Primary Examiner — Robert A Delehanty
(74) *Attorney, Agent, or Firm* — Edgar A. Zarins; Nirav D. Parikh

(57) **CLAIM**

The ornamental design for a faucet, as shown and described.

DESCRIPTION

FIG. **1** is a perspective view of a faucet showing my new design;
FIG. **2** is a rear perspective view thereof;
FIG. **3** is a rear view thereof;
FIG. **4** is a front elevational view thereof;
FIG. **5** is a top plan view thereof;
FIG. **6** is a left side view thereof;
FIG. **7** is a right side view thereof; and,
FIG. **8** is a bottom view thereof.
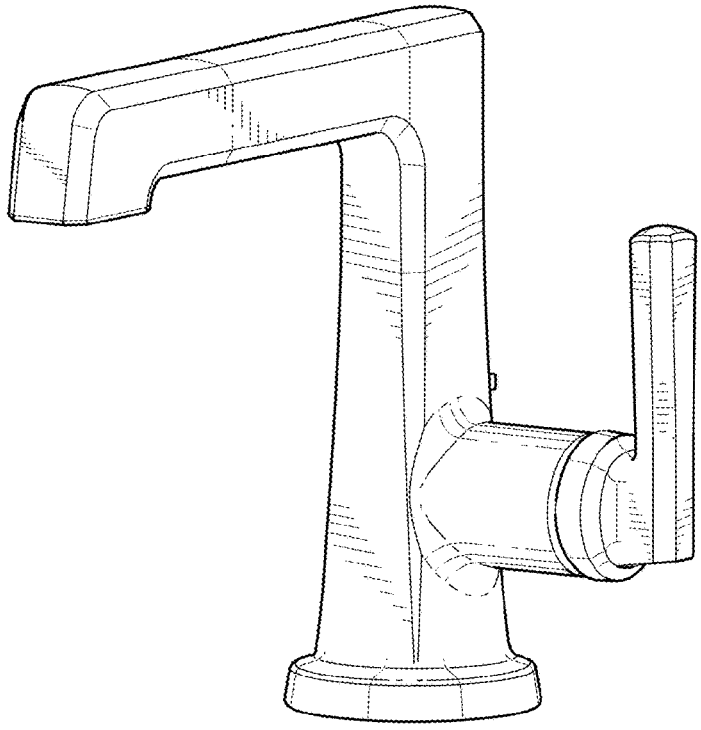
1 Claim, 4 Drawing Sheets