US009410999B2

(12) **United States Patent**
Alatas et al.

(10) **Patent No.: US 9,410,999 B2**
(45) **Date of Patent: Aug. 9, 2016**

(54) **CONTACTLESS CAPACITIVE DISTANCE SENSOR**

(75) Inventors: **Fatih Alatas**, Munich (DE); **Martin Kördel**, Munich (DE); **Anton Schick**, Velden (DE)

(73) Assignee: **SIEMENS AKTIENGESELLSCHAFT**, Munich (DE)

(*) Notice: Subject to any disclaimer, the term of this patent is extended or adjusted under 35 U.S.C. 154(b) by 339 days.

(21) Appl. No.: **14/241,369**

(22) PCT Filed: **Aug. 2, 2012**

(86) PCT No.: **PCT/EP2012/065170**

§ 371 (c)(1),
(2), (4) Date: **Feb. 26, 2014**

(87) PCT Pub. No.: **WO2013/029915**

PCT Pub. Date: **Mar. 7, 2013**

(65) **Prior Publication Data**

US 2014/0218056 A1 Aug. 7, 2014

(30) **Foreign Application Priority Data**

Aug. 26, 2011 (DE) 10 2011 081 666

(51) **Int. Cl.**
G01R 27/26 (2006.01)
G06K 9/00 (2006.01)
(Continued)

(52) **U.S. Cl.**
CPC ***G01R 27/2605*** (2013.01); ***G01B 7/023*** (2013.01); ***G01B 7/08*** (2013.01); ***G01D 5/24*** (2013.01); ***G06F 3/0414*** (2013.01); ***G06K 9/0002*** (2013.01); *G01R 31/312* (2013.01)

(58) **Field of Classification Search**
CPC G01D 5/24; G01D 5/241; G01D 5/2412; G01D 5/2417; G01R 27/26; G01R 27/2605; G01R 31/312; G01B 7/023; G01B 7/08; G06K 9/0002; G06F 3/0414; G06F 2203/04103; H03K 17/955; H03K 2217/960725; G01L 1/146
USPC 324/600, 649, 658, 661, 662, 679, 686; 702/47, 52; 345/173, 174
See application file for complete search history.

(56) **References Cited**

U.S. PATENT DOCUMENTS

4,924,172 A * 5/1990 Holmgren G01D 5/2417 324/664
4,958,129 A 9/1990 Poduje et al.
(Continued)

FOREIGN PATENT DOCUMENTS

CN 1782721 6/2006
CN 101685119 3/2010
(Continued)

OTHER PUBLICATIONS

Office Action dated Apr. 30, 2015 in corresponding Chinese Patent Application No. 201280041589.9.
(Continued)

Primary Examiner — Hoai-An D Nguyen
(74) *Attorney, Agent, or Firm* — Slayden Grubert Beard PLLC

(57) **ABSTRACT**

Electrically conductive structures produced on or in a substrate, or produced such that the structures are floating in a substrate undergo simple and reliable capacitive contactless and non-destructive inspection using a capacitive sensor having at least two sensor electrode surfaces which are arranged at different constant distances from one another parallel to a surface of the substrate and are arranged beside one another relative to the surface of the substrate.
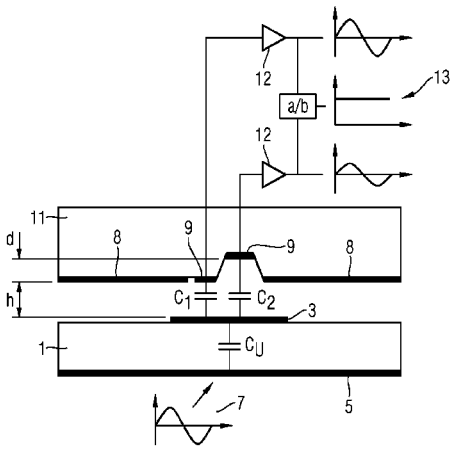
32 Claims, 6 Drawing Sheets