US009510499B2

(12) **United States Patent**
Tuttle et al.

(10) **Patent No.: US 9,510,499 B2**
(45) **Date of Patent: *Dec. 6, 2016**

(54) **FARM IMPLEMENT HAVING A FRAME SUPPORTED BY A LIFT WHEEL ASSEMBLY**

(71) Applicant: **CNH Industrial Canada, Ltd.**, Saskatoon (CA)

(72) Inventors: **Thomas Tuttle**, Naperville, IL (US); **Tyler Remoue**, Rockglen (CA)

(73) Assignee: **CNH Industrial Canada, Ltd.**, Saskatoon, Saskatchewan (CA)

(*) Notice: Subject to any disclaimer, the term of this patent is extended or adjusted under 35 U.S.C. 154(b) by 0 days.

This patent is subject to a terminal disclaimer.

(21) Appl. No.: **14/490,982**

(22) Filed: **Sep. 19, 2014**

(65) **Prior Publication Data**

US 2015/0000942 A1 Jan. 1, 2015

Related U.S. Application Data

(62) Division of application No. 13/248,798, filed on Sep. 29, 2011, now Pat. No. 8,862,338.

(51) **Int. Cl.**

A01B 63/22	(2006.01)
A01B 73/04	(2006.01)
A01C 7/20	(2006.01)

(52) **U.S. Cl.**

CPC ***A01B 63/22*** (2013.01); ***A01B 73/044*** (2013.01); ***A01C 7/208*** (2013.01)

(58) **Field of Classification Search**

CPC A01B 59/042; A01B 59/04; A01B 59/00; A01B 63/22; A01B 63/16; A01B 63/14; A01B 63/00; A01B 73/044; A01B 73/04; A01B 73/02; A01B 73/00; A01C 7/208; A01C 7/20; A01C 7/00

USPC 701/50; 111/200, 121; 172/311, 456, 172/459, 463

See application file for complete search history.

(56) **References Cited**

U.S. PATENT DOCUMENTS

2,830,519	A	4/1958	Chandler et al.	
3,627,053	A	12/1971	Hook et al.	
3,762,480	A	10/1973	Hofer	
4,320,805	A	3/1982	Winter	
5,009,062	A *	4/1991	Urich	A01F 15/00 100/100
5,348,101	A	9/1994	Fox et al.	
5,894,894	A	4/1999	Szymczak	
5,899,950	A	5/1999	Milender et al.	
6,318,477	B1	11/2001	Bettin	
6,378,619	B2	4/2002	Mayerle et al.	
6,675,907	B2	1/2004	Moser et al.	
6,749,035	B2	6/2004	Bundy	
7,739,015	B2	6/2010	Senneff et al.	
8,862,338	B2 *	10/2014	Tuttle	A01B 63/22 172/2
8,909,435	B2 *	12/2014	Tuttle	A01B 63/22 111/200
2004/0016556	A1 *	1/2004	Barber	A01B 63/22 172/452
2005/0087378	A1	4/2005	Hrazdera	
2009/0187315	A1	7/2009	Yegerlehner et al.	

* cited by examiner

Primary Examiner — Christopher J Novosad

(74) *Attorney, Agent, or Firm* — Rebecca L. Henkel

(57) **ABSTRACT**

A method and apparatus for automating some of the tasks that heretofore required operator action at headland turns or similar events are provided. The present invention automates operation of lift assist wheels and/or gull wings, such as those found on a stack-fold implement, based on the position of the tractor hitch to which the implement is coupled. An operator may control the position of the implement, such as at a headland turn, by raising and lowering the tractor hitch using a remote control. The invention enables the planter to compare the tractor hitch position relative to an implement position and control operation of the implement accordingly without additional user inputs.
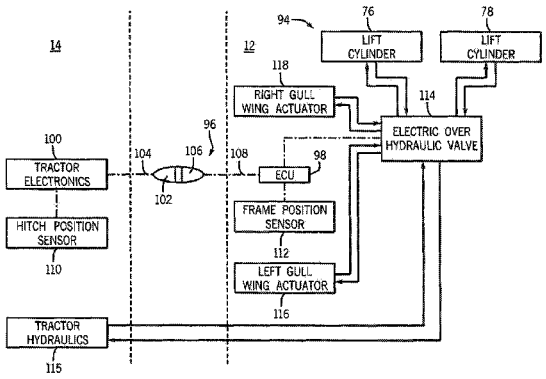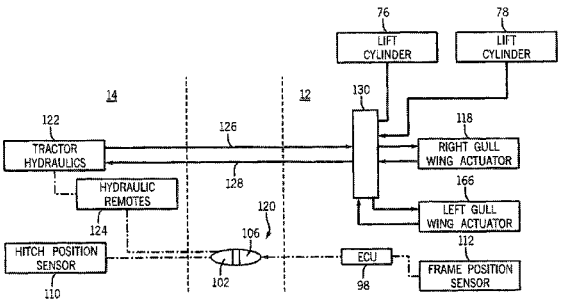
4 Claims, 6 Drawing Sheets