US009409399B2

(12) **United States Patent**
Anderson, Jr. et al.

(10) **Patent No.: US 9,409,399 B2**
(45) **Date of Patent: Aug. 9, 2016**

(54) **MUZZLE FOR PRINTHEAD ASSEMBLY**

(71) Applicant: **FUNAI ELECTRIC CO., LTD.**, Osaka (JP)

(72) Inventors: **James Daniel Anderson, Jr.**, Harrodsburg, KY (US); **Sean Weaver**, Walton, KY (US)

(73) Assignee: **FUNAI ELECTRIC CO., LTD**, Osaka (JP)

(*) Notice: Subject to any disclaimer, the term of this patent is extended or adjusted under 35 U.S.C. 154(b) by 14 days.

(21) Appl. No.: **14/292,319**

(22) Filed: **May 30, 2014**

(65) **Prior Publication Data**

US 2015/0343784 A1 Dec. 3, 2015

(51) **Int. Cl.**
B41J 2/165 (2006.01)
B41J 2/175 (2006.01)

(52) **U.S. Cl.**
CPC ***B41J 2/16505*** (2013.01); ***B41J 2/17533*** (2013.01)

(58) **Field of Classification Search**
CPC B41J 2/14024; B41J 2/155; B41J 2/1603; B41J 2/1623; B41J 2/1628; B41J 2/1631; B41J 2/16505; B41J 2/16508; B41J 2/16511; B41J 2/16526; B41J 2/16535; B41J 2/16547; B41J 2/16552; B41J 2/16585
USPC 347/20, 22, 29
See application file for complete search history.

(56) **References Cited**

U.S. PATENT DOCUMENTS

6,155,678	A	12/2000	Komplin et al.	
6,247,598	B1	6/2001	Hosaka et al.	
2003/0048338	A1	3/2003	Qingguo et al.	
2006/0132553	A1 *	6/2006	Droege et al.	347/84
2008/0204526	A1 *	8/2008	Pearson et al.	347/86
2010/0177140	A1 *	7/2010	Scanlan	347/29

* cited by examiner

Primary Examiner — Manish S Shah
Assistant Examiner — Roger W Pisha, II
(74) *Attorney, Agent, or Firm* — Amster, Rothstein & Ebenstein LLP

(57) **ABSTRACT**

A muzzle cap for a printhead assembly including a main body comprising a side wall, a top wall and a bottom wall, a vent seal disposed within an opening in the top wall, a nozzle plate seal disposed within an opening in the bottom wall, and a nozzle plate seal retainer that holds the nozzle plate seal within the opening in the bottom wall.
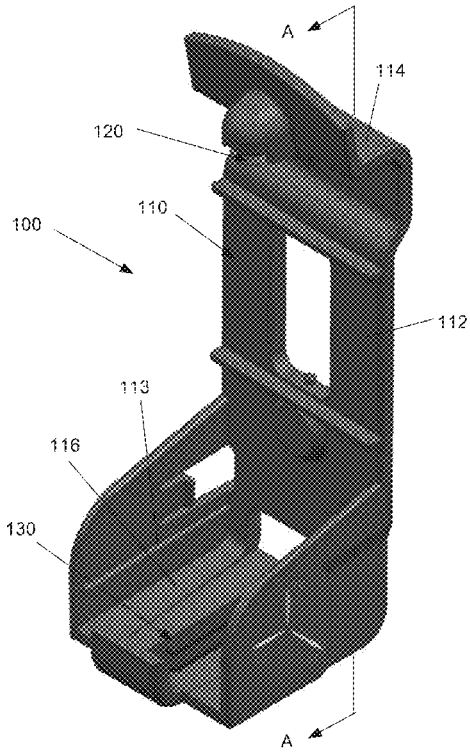
14 Claims, 18 Drawing Sheets