US009409299B2

(12) **United States Patent**
Segler

(10) **Patent No.: US 9,409,299 B2**
(45) **Date of Patent: Aug. 9, 2016**

(54) **KNIFE**

(71) Applicant: **Florian Segler**, Solingen (DE)

(72) Inventor: **Florian Segler**, Solingen (DE)

(73) Assignee: **MARTOR KG**, Solingen (DE)

(*) Notice: Subject to any disclaimer, the term of this patent is extended or adjusted under 35 U.S.C. 154(b) by 390 days.

(21) Appl. No.: **14/014,552**

(22) Filed: **Aug. 30, 2013**

(65) **Prior Publication Data**

US 2014/0059864 A1 Mar. 6, 2014

(30) **Foreign Application Priority Data**

Sep. 4, 2012 (DE) 10 2012 017 431

(51) **Int. Cl.**
B26B 1/08 (2006.01)
B26B 5/00 (2006.01)

(52) **U.S. Cl.**
CPC . ***B26B 1/08*** (2013.01); ***B26B 5/002*** (2013.01); ***B26B 5/003*** (2013.01)

(58) **Field of Classification Search**
CPC B26B 5/001–5/003; B26B 1/08; A61B 2017/32113; A61B 2017/3213
USPC 30/2, 162
See application file for complete search history.

(56) **References Cited**

U.S. PATENT DOCUMENTS

4,868,985 A * 9/1989 Rehm B26B 5/003 30/162
5,531,754 A * 7/1996 Shackelford, Sr. A61B 17/3211 30/162
5,581,890 A 12/1996 Schmidt
6,226,873 B1 5/2001 Okumura
6,949,109 B2 * 9/2005 Iske A61B 17/3211 30/162
7,101,382 B2 * 9/2006 George A61B 17/3211 30/162
2003/0028973 A1 2/2003 Johnson et al.
2004/0111895 A1 * 6/2004 Huang B26B 5/002 30/162
2004/0237312 A1 * 12/2004 Hernandez B26B 5/003 30/162
2004/0250426 A1 * 12/2004 Polei B26B 5/001 30/162
2005/0050734 A1 * 3/2005 Kesinger B26B 5/002 30/162
2005/0150116 A1 7/2005 Johnson
2005/0193568 A1 * 9/2005 Peyrot B26B 5/001 30/162
2006/0080842 A1 * 4/2006 Schmidt B26B 5/001 30/162
2007/0119056 A1 * 5/2007 Polei B26B 5/001 30/162

(Continued)

FOREIGN PATENT DOCUMENTS

CN 2495423 6/2002
WO 157262 A2 12/2011

Primary Examiner — Kenneth E Peterson
(74) *Attorney, Agent, or Firm* — Andrew Wilford

(57) **ABSTRACT**

The invention relates to a knife comprising a housing (**11**) and an actuator (**14**) that can shift a blade holder (**13**) carrying a blade (**47**) in the housing (**11**) between at least one safety position and at least one cutting position, the blade holder (**13**) being tensioned by a spring (**35**). The characterizing feature consists in the fact that the spring (**35**) is attached to the housing (**11**) and to a first entrainment formation (**25**), and that a second entrainment formation (**46**) is associated with the blade holder (**13**), which second entrainment formation can be releasably engaged with the first entrainment formation (**25**) such that the first entrainment formation (**25**) can be moved by the second entrainment formation (**46**) from the safety position to the cutting position by movement of the blade holder.
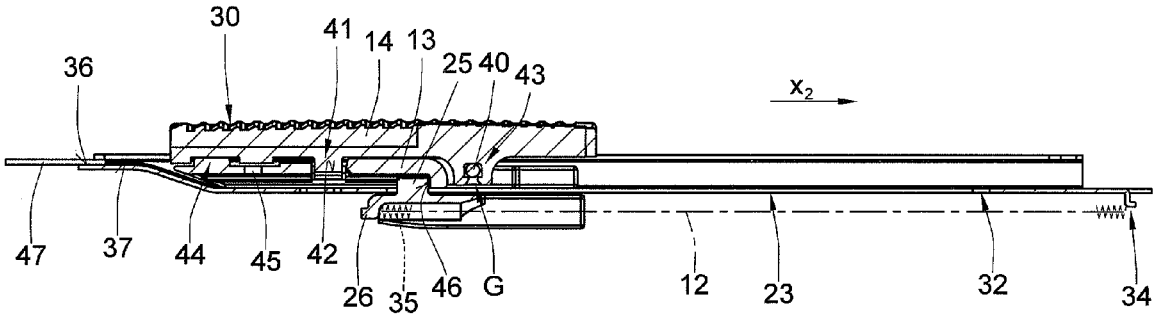
10 Claims, 6 Drawing Sheets