US009408699B2

(12) **United States Patent**
Stalcup et al.

(10) **Patent No.: US 9,408,699 B2**
(45) **Date of Patent: Aug. 9, 2016**

(54) **REMOVABLE AUGMENT FOR MEDICAL IMPLANT**

(71) Applicant: **SMed-TA/TD, LLC**, Columbia City, IN (US)

(72) Inventors: **Gregory C. Stalcup**, Columbia City, IN (US); **Troy D. Knapp**, Alachua, FL (US)

(73) Assignee: **SMed-TA/TD, LLC**, Columbia City, IN (US)

(*) Notice: Subject to any disclaimer, the term of this patent is extended or adjusted under 35 U.S.C. 154(b) by 77 days.

(21) Appl. No.: **14/204,862**

(22) Filed: **Mar. 11, 2014**

(65) **Prior Publication Data**

US 2014/0277529 A1 Sep. 18, 2014

Related U.S. Application Data

(60) Provisional application No. 61/787,598, filed on Mar. 15, 2013.

(51) **Int. Cl.**

A61F 2/38	(2006.01)
A61F 2/30	(2006.01)
A61F 2/46	(2006.01)

(52) **U.S. Cl.**

CPC ***A61F 2/38*** (2013.01); ***A61F 2/30734*** (2013.01); ***A61F 2/389*** (2013.01); ***A61F 2/3859*** (2013.01); *A61F 2002/3092* (2013.01); *A61F 2002/30433* (2013.01); *A61F 2002/30736* (2013.01); *A61F 2002/4619* (2013.01); *A61F 2310/00359* (2013.01)

(58) **Field of Classification Search**

CPC A61F 2/389; A61F 2/8368; A61F 2/3688; A61F 2/38

See application file for complete search history.

(56) **References Cited**

U.S. PATENT DOCUMENTS

3,855,638	A	12/1974	Pilliar
3,867,728	A	2/1975	Stubstad et al.
4,011,602	A	3/1977	Rybicki et al.
4,222,128	A	9/1980	Tomonaga et al.
4,608,052	A	8/1986	Van Kampen et al.
4,737,411	A	4/1988	Graves, Jr. et al.
4,769,041	A	9/1988	Morscher
4,846,834	A	7/1989	von Recum et al.
4,976,738	A	12/1990	Frey et al.
5,030,233	A	7/1991	Ducheyne
5,104,410	A	4/1992	Chowdhary
5,204,055	A	4/1993	Sachs et al.

(Continued)

FOREIGN PATENT DOCUMENTS

WO 03/026714 A1 4/2003

OTHER PUBLICATIONS

Notification of Transmittal of the International Search Report and the Written Opinion of the International Searching Authority, or the Declaration dated Jul. 4, 2014 for International Application No. PCT/US2014/026090 (14 pages).

(Continued)

Primary Examiner — Jason-Dennis Stewart
(74) *Attorney, Agent, or Firm* — Taylor IP, P.C.

(57) **ABSTRACT**

An orthopaedic augment includes a porous material, which is removably attached to a medical implant. The porous material has a bone ingrowth surface for interfacing with an existing bone material and another surface for interfacing with the medical implant.
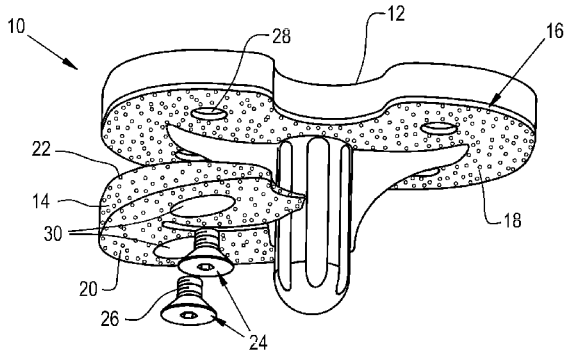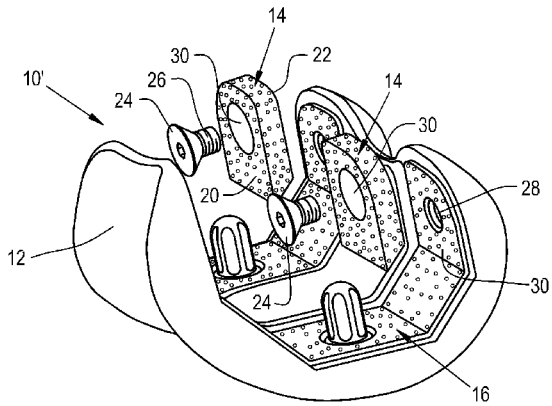
16 Claims, 3 Drawing Sheets