US005606799A

United States Patent [19]

Melton

[11] **Patent Number: 5,606,799**

[45] **Date of Patent: Mar. 4, 1997**

[54] **DETACHABLE PIVOTING CLIPPER BLADES**

[75] Inventor: **Scott Melton**, Erie, Ill.

[73] Assignee: **Wahl Clipper Corporation**, Sterling, Ill.

[21] Appl. No.: **327,436**

[22] Filed: **Oct. 21, 1994**

[51] **Int. Cl.**[6] **B26B 19/06**

[52] **U.S. Cl.** **30/216**; 30/199

[58] **Field of Search** 30/208, 209, 210, 30/211, 216, 1, 220, 228, 89, 194, 43.92, 199

[56] **References Cited**

U.S. PATENT DOCUMENTS

511,966	1/1894	Olsen .	
1,455,751	5/1923	Hartman .	
1,997,096	4/1935	Andis .	
2,067,075	1/1937	Clark .	
2,222,317	11/1940	Martin .	
3,099,086	7/1963	Anderson .	
3,217,409	11/1965	Proffitt .	
3,279,056	10/1966	Andis .	
3,672,049	6/1972	Demci et al. .	
4,112,271	9/1978	Marchetti	30/43.92 X
4,125,940	11/1978	Ihasz et al. .	
4,332,321	6/1982	Wratschko .	
4,512,077	4/1985	Tanabe et al. .	
4,581,822	4/1986	Fujimura .	
4,700,476	10/1987	Locke et al. .	
4,765,060	8/1988	Veselaski et al. .	
4,926,553	5/1990	Miskin et al. .	
5,007,168	4/1991	Messinger et al. .	
5,068,966	12/1991	Wahl et al. .	
5,165,172	11/1992	Weinrauch	30/210 X

FOREIGN PATENT DOCUMENTS

0147134	7/1985	European Pat. Off. .
0375949	7/1990	European Pat. Off. .
2639280	5/1990	France .
2660589	10/1991	France .
2663255	12/1991	France .
2141065	12/1984	United Kingdom .

Primary Examiner—Hwei-Siu Payer
Attorney, Agent, or Firm—Greer, Burns & Crain, Ltd.

[57] **ABSTRACT**

A hair clipper including a handle portion having a drive end with a first coupler formation, a blade assembly having a housing at least partially enclosing a reciprocating blade and a fixed blade, and having a second coupler formation for engaging the first coupler formation, the first and second coupler formations forming a ball-and-socket connection.
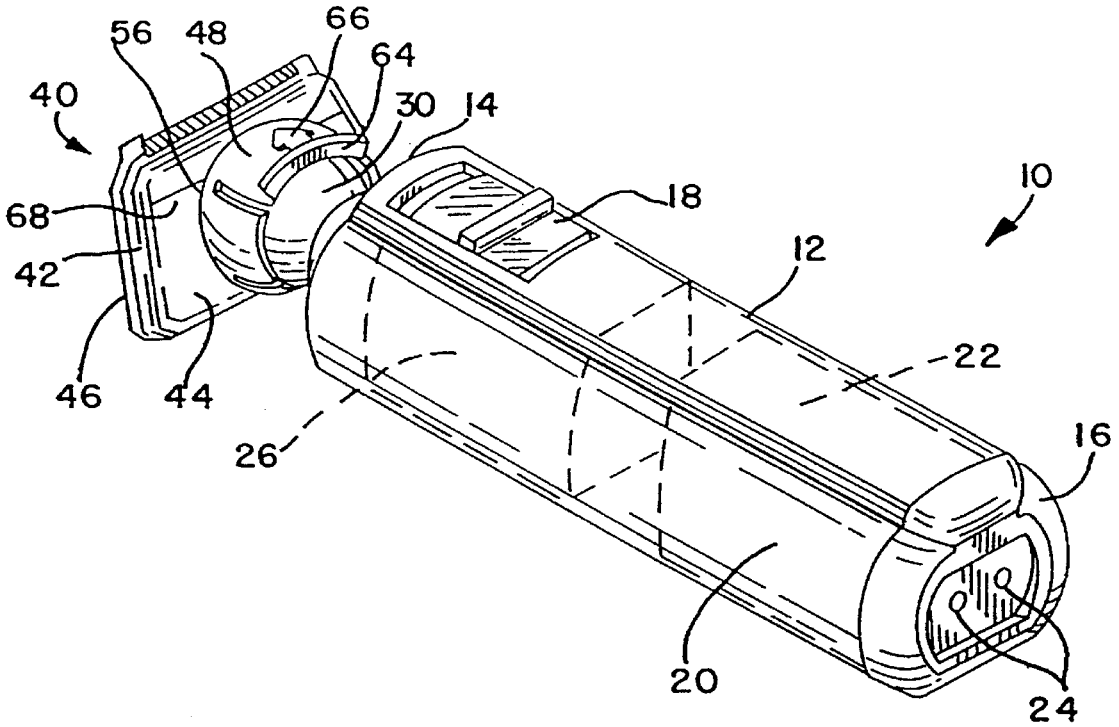
22 Claims, 2 Drawing Sheets