Oct. 10, 1961 J. H. O. HARRIES 3,004,099

APPARATUS FOR LIGHT INTENSITY CONTROL IN COLOR TELEVISION PROJECTION APPARATUS

Filed Aug. 27, 1958 2 Sheets-Sheet 1

FIG. 1.

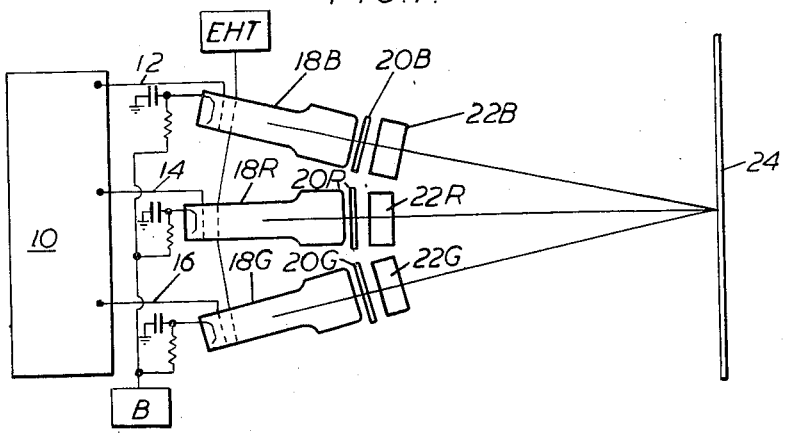

FIG. 2.

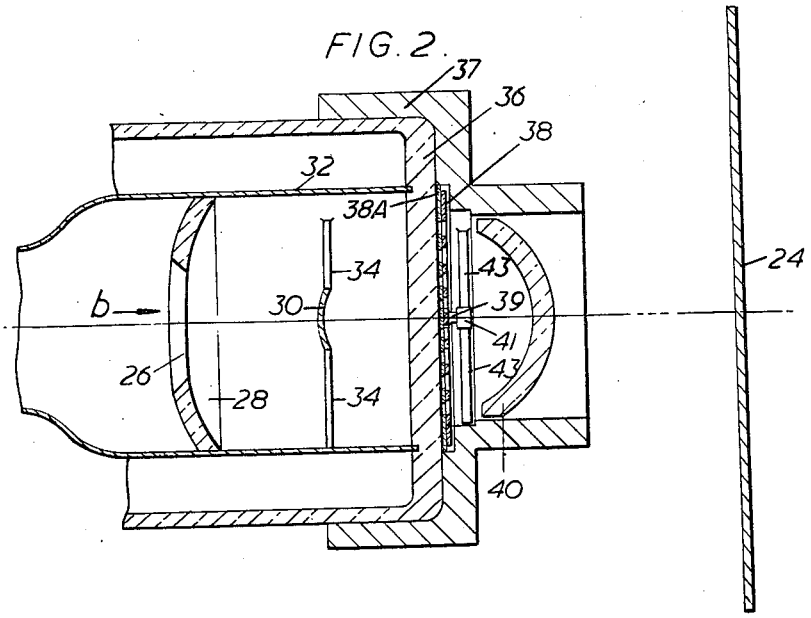

Inventor
John Henry Owen Harries
By
Ralph B. Stewart
Attorney