April 4, 1950 R. G. AMES 2,502,499

COMBINED TAPE AND MASTIC APPLICATOR

Filed June 2, 1945 2 Sheets-Sheet 1

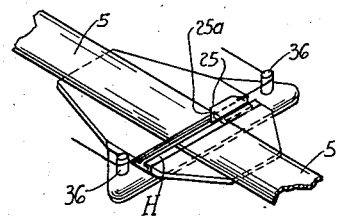

Fig. 10

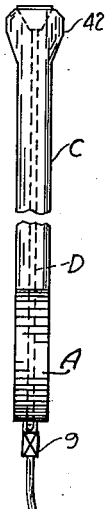

Fig. 8

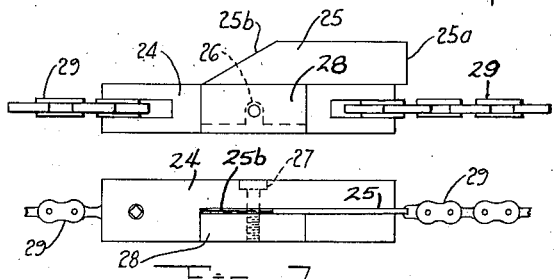

Fig. 7

Fig. 9

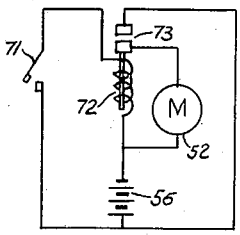

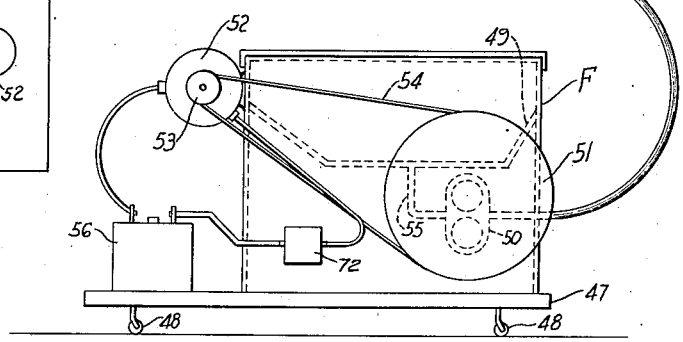

Fig. 1

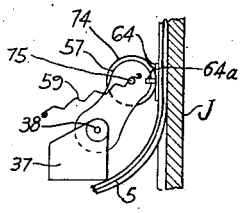

Fig. 11

INVENTOR.
ROBERT G. AMES
BY
Munn, Liddy & Glascock
ATTORNEYS