United States Patent [19]

Grant et al.

[11] **Patent Number: 4,699,298**

[45] **Date of Patent: Oct. 13, 1987**

[54] **BUNG CONNECTION**

[75] Inventors: **Robert W. Grant**, Pleasanton, Calif.; **Joshua P. Waldman**, Edina, Minn.

[73] Assignee: **FSI Corporation**, Chaska, Minn.

[21] Appl. No.: **815,025**

[22] Filed: **Dec. 30, 1985**

Related U.S. Application Data

[63] Continuation-in-part of Ser. No. 713,869, Mar. 20, 1985, abandoned.

[51] **Int. Cl.**[4] **B65D 83/00**

[52] **U.S. Cl.** **222/400.7**; 222/542; 222/545; 285/914

[58] **Field of Search** 222/400.7, 400.8, 464, 222/512, 542, 545, 549, 552, 563, 23, 41, 153; 137/212; 285/914

[56] **References Cited**

U.S. PATENT DOCUMENTS

850,070	4/1907	Spikes	222/400.7
928,813	7/1909	Spikes	137/588
1,304,390	5/1919	Semenow et al.	222/482
2,186,925	1/1940	Hooper et al.	137/321
2,547,084	4/1951	Marcuse	239/340
2,790,571	4/1957	Flaith et al.	217/99
3,149,763	9/1964	Exton	222/542 X
3,228,413	1/1966	Stevens, Jr.	137/322
3,265,233	8/1966	Tuuri	222/545 X
3,273,586	9/1966	Killmeyer	137/268
3,287,031	11/1966	Simmons et al.	285/914 X
3,861,569	1/1975	Johnston	222/400.7
4,134,522	1/1979	Patzke et al.	222/153
4,150,673	4/1979	Watt	285/914 X
4,211,439	7/1980	Moldestad	285/914 X
4,362,255	12/1982	Bond	222/542 X
4,411,287	10/1983	Hyde	137/315
4,529,105	7/1985	Lewins	222/153

Primary Examiner—Robert J. Spar
Assistant Examiner—Jay I. Alexander
Attorney, Agent, or Firm—Palmatier & Sjoquist

[57] **ABSTRACT**

A bung connection for a rigid container has a bung body which threads into the bung opening, and has a base wall with two or more access openings which are connected to tubes extending to the flowable material in the container. A tube mounting is removably inserted into the bung body and has flow ports which connect with the access ports in the base wall. Flow tubes connect to the tube mounting. The tube mounting and bung body have a coded pattern of interfitting lugs and recesses which prevent full assembly of the tube mounting and bung body if the coding is wrong. A clamp ring secures the tube mounting in the bung body. A shipping plug and liner replace the tube mounting in the bung body for shipping the container to be refilled and then returned for use again.
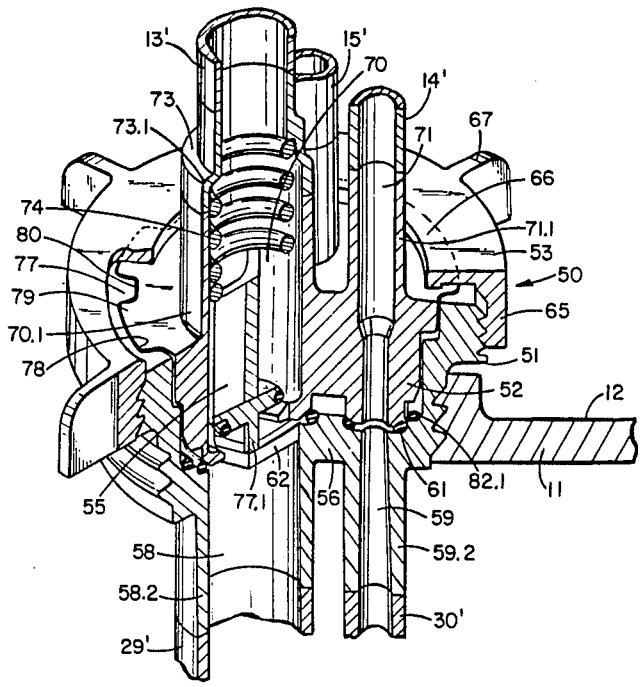
2 Claims, 13 Drawing Figures