US009993098B2

(12) **United States Patent**
Leser et al.

(10) **Patent No.: US 9,993,098 B2**
(45) **Date of Patent: Jun. 12, 2018**

(54) **INSULATED CONTAINER WITH MOLDED BRIM**

(75) Inventors: **Chris K Leser**, Evansville, IN (US); **Charles T Wallace**, Evansville, IN (US); **Philip A Driskill**, Newburgh, IN (US); **John B Euler**, Evansville, IN (US); **Jason J Paladino**, Newburgh, IN (US); **Milan C Maravich**, Newburgh, IN (US); **Daniel O Davis**, Cynthiana, IN (US); **Jeffrey A Mann**, Evansville, IN (US); **Randy A Bowlds**, Evansville, IN (US)

(73) Assignee: **Berry Plastics Corporation**, Evansville, IN (US)

(*) Notice: Subject to any disclaimer, the term of this patent is extended or adjusted under 35 U.S.C. 154(b) by 899 days.

(21) Appl. No.: **13/525,640**

(22) Filed: **Jun. 18, 2012**

(65) **Prior Publication Data**

US 2012/0318806 A1 Dec. 20, 2012

Related U.S. Application Data

(60) Provisional application No. 61/498,435, filed on Jun. 17, 2011, provisional application No. 61/618,632, filed on Mar. 30, 2012.

(51) **Int. Cl.**
A47G 19/22 (2006.01)
B29C 65/06 (2006.01)
(Continued)

(52) **U.S. Cl.**
CPC ***A47G 19/2288*** (2013.01); ***B65D 43/0212*** (2013.01); ***B65D 81/3874*** (2013.01); *B29C 43/02* (2013.01); *B29C 65/02* (2013.01); *B29C 65/06* (2013.01); *B29C 65/0672* (2013.01); *B29C 65/48* (2013.01); *B29C 66/5344* (2013.01); *B29C 66/71* (2013.01);
(Continued)

(58) **Field of Classification Search**
CPC . B65D 3/06; B65D 3/28; B65D 15/04; B65D 15/00; B65D 15/08; B65D 15/16; B65D 15/20
USPC .. 220/592.17, 592.26, 292.2, 641, 640, 643; 229/400, 403; 206/819
See application file for complete search history.

(56) **References Cited**

U.S. PATENT DOCUMENTS

1,396,282 A 11/1921 Penn
1,435,120 A 11/1922 Holman
(Continued)

FOREIGN PATENT DOCUMENTS

CA 2291607 6/2000
CA 2765489 12/2010
(Continued)

OTHER PUBLICATIONS

Jaakko I. Raukola, A New Technology to Manufacture Polypropylene Foam Sheet and Biaxially Oriented Foam Film, VTT Publications 361, Technical Research Centre of Finland, Apr. 1998, 100 pages.

(Continued)

Primary Examiner — Andrew Perreault
(74) *Attorney, Agent, or Firm* — Barnes & Thornburg, LLP

(57) **ABSTRACT**

A container is formed to include an interior region and a mouth opening into the interior region. The container includes a floor and a side wall coupled to the floor to define the interior region between the floor and the side wall.
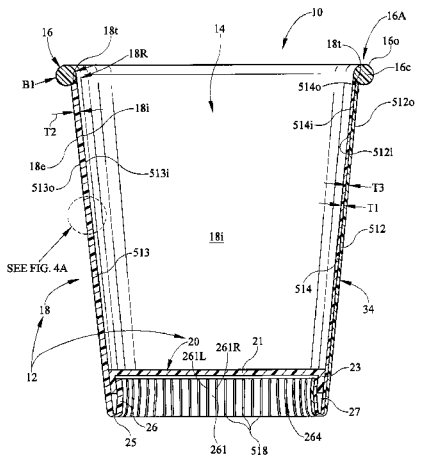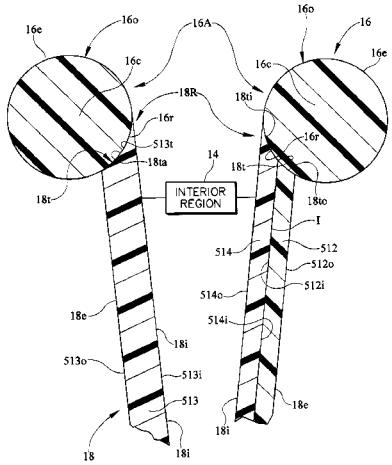
17 Claims, 11 Drawing Sheets