FIGURE 1

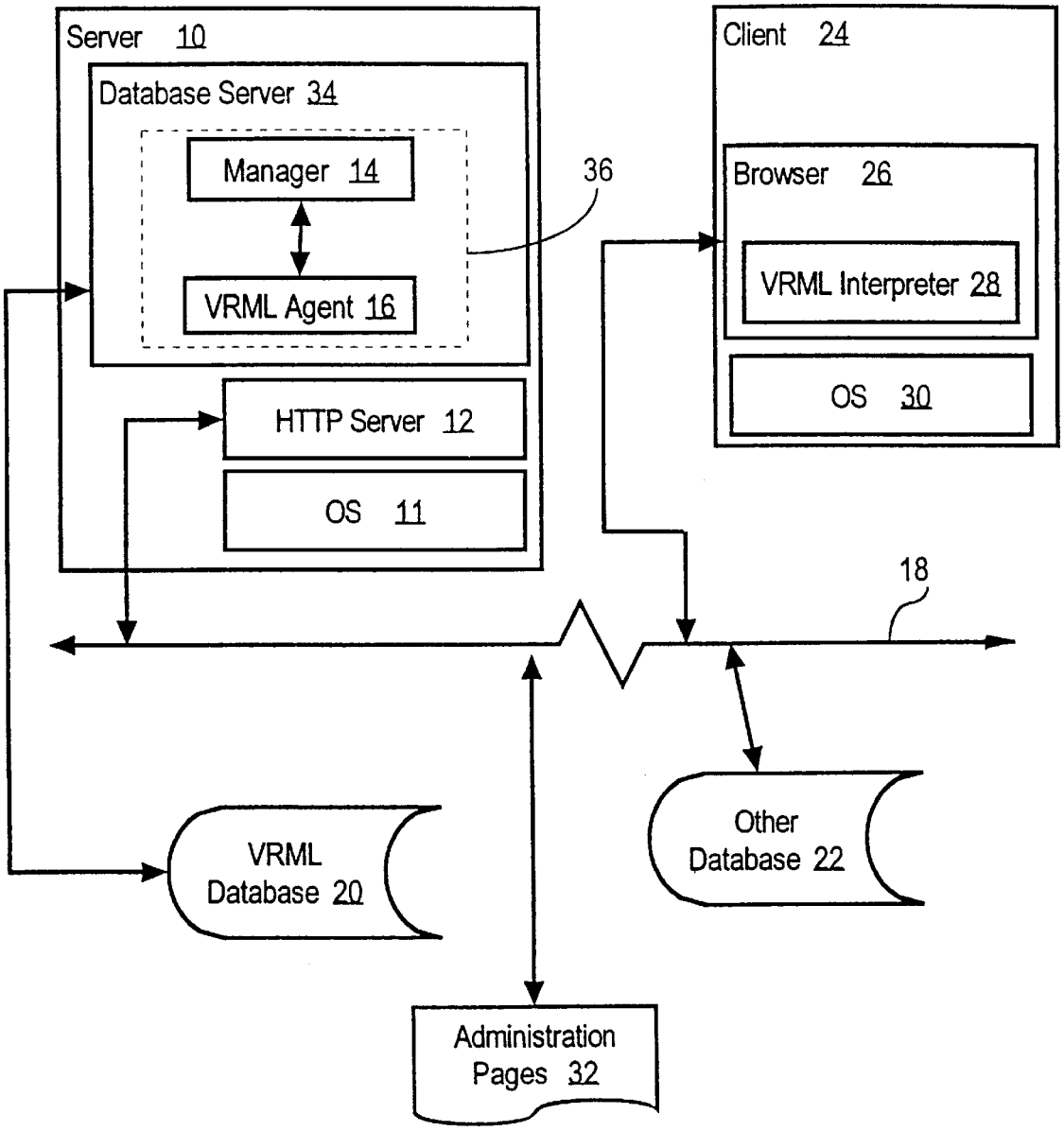
Server 10
Database Server 34
Manager 14
VRML Agent 16
36
HTTP Server 12
OS 11
Client 24
Browser 26
VRML Interpreter 28
OS 30
18
VRML Database 20
Other Database 22
Administration Pages 32