Nov. 21, 1939. C. A. SABBAH 2,180,998

ELECTRIC VALVE CONVERTING SYSTEM

Filed April 7, 1937 2 Sheets-Sheet 1

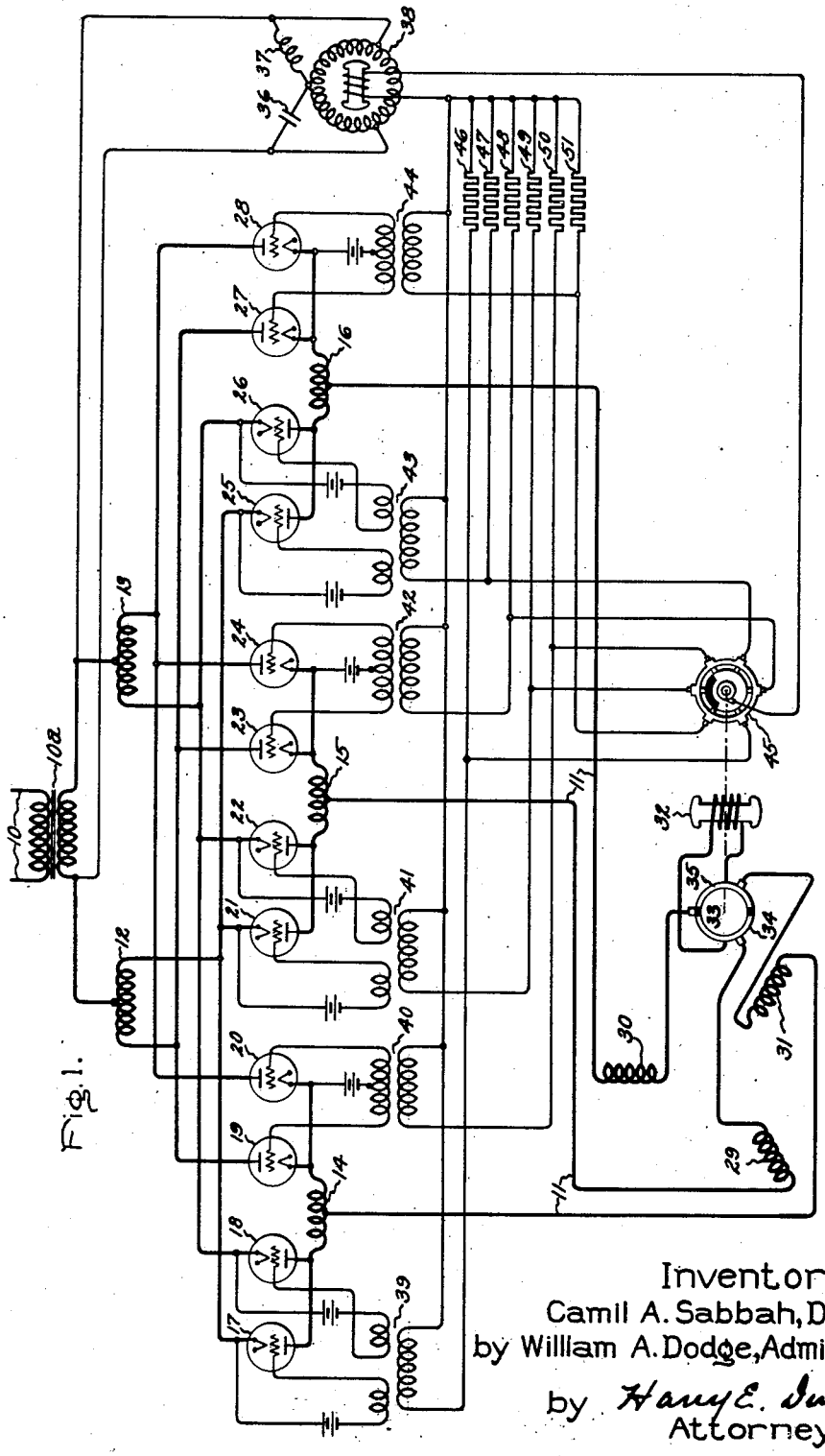

Fig. 1.

Inventor:
Camil A. Sabbah, Deceased,
by William A. Dodge, Administrator,
by Harry E. Dunham
Attorney.