United States Patent [19]

Koeniger

[11] **Patent Number: 4,565,198**

[45] **Date of Patent: Jan. 21, 1986**

[54] **METHOD FOR ALTERING THE CURVATURE OF THE CORNEA**

[75] Inventor: **Erich A. Koeniger**, Metairie, La.

[73] Assignee: **Barnes-Hind, Inc.**, Sunnyvale, Calif.

[21] Appl. No.: **566,105**

[22] Filed: **Dec. 27, 1983**

[51] **Int. Cl.**[4] **A61F 17/32**; A61B 17/32

[52] **U.S. Cl.** ..... **128/305**; 128/1 R; 623/5

[58] **Field of Search** ..... 128/1 R, 303 R, 305; 3/13, 1; 604/895, 893, 294; 351/160

[56] **References Cited**

U.S. PATENT DOCUMENTS

3,488,111	1/1970	Isen	351/160
3,831,604	8/1974	Neefe	604/893
4,126,904	11/1978	Shepard	3/13
4,298,004	11/1981	Schachar et al.	128/305
4,327,450	5/1982	Girard	3/13
4,343,787	8/1982	Katz	424/78
4,346,482	8/1982	Tennant et al.	3/13
4,406,285	9/1983	Villasenor et al.	128/305

OTHER PUBLICATIONS

"Thermokeratoplasty in the Treatment of Keratoconus" by A. R. Gasset et al., American Journal of Ophthalmology, vol. 79, No. 2, Feb. 1975, pp. 226–232.

"Corneal Surgery" (Book) by Louis J. Girard, vol. two, published by the C. V. Mosby Co., St. Louis, Toronto, London, 1981, pp. 149–153.

Primary Examiner—Ronald L. Frinks

[57] **ABSTRACT**

A method for altering the radius of curvature of the cornea which includes the steps of making incisions into the cornea and affixing a rigid gas permeable contact lens, having predetermined radius of curvature, to the eye to have the cornea conform to the shape of the lens.
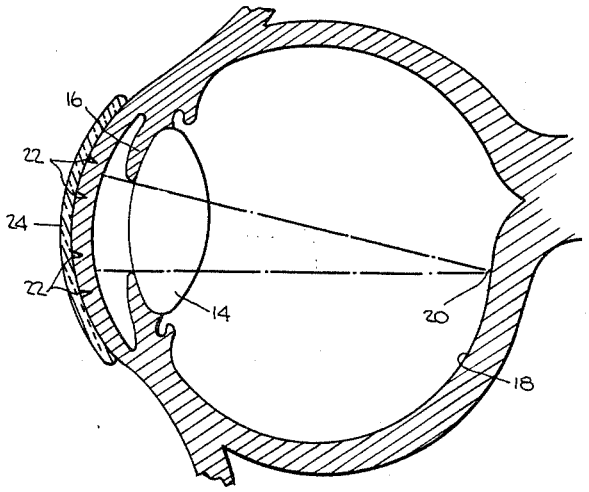
2 Claims, 4 Drawing Figures