United States Patent [19]

Shew

[11] **Patent Number: 4,664,298**

[45] **Date of Patent: May 12, 1987**

[54] **DUAL MODE GREASE GUN**

[75] Inventor: **Jerry D. Shew**, Niles, Ill.

[73] Assignee: **Stewart-Warner Corporation**, Chicago, Ill.

[21] Appl. No.: **729,242**

[22] Filed: **May 1, 1985**

[51] **Int. Cl.**[4] **G01F 11/06**

[52] **U.S. Cl.** **222/287**; 222/256; 222/288; 222/309; 222/383; 222/409; 74/522; 92/13.4; 92/13.7; 184/105.2

[58] **Field of Search** 222/191, 372, 383, 287, 222/409, 288, 404, 325, 326, 309, 256; 74/522, 525; 267/158, 159; 184/105.1, 105.2, 105.3; 239/331, 333, 526; 92/13.7, 13, 13.4

[56] **References Cited**

U.S. PATENT DOCUMENTS

507,407	10/1893	Bole	267/158 X
1,969,920	8/1934	Andrews	222/325 X
2,044,044	6/1936	Anthony	29/13.7 X
2,497,762	2/1950	Davis	222/256 X
2,923,443	2/1960	Sundholm	222/383 X
3,187,959	6/1965	Morehouse	222/326 X
3,780,830	12/1973	Helgerud et al.	222/326 X
3,789,742	2/1974	Hershman et al.	267/159 X
4,560,095	12/1985	Shew	222/383 X

FOREIGN PATENT DOCUMENTS

636663 9/1936 Fed. Rep. of Germany 222/287

OTHER PUBLICATIONS

Lincoln Engineering Grease Gun Models 1013, 1012 & 1145, No Date, 1 page.

Primary Examiner—Joseph J. Rolla
Assistant Examiner—P. McCoy Smith
Attorney, Agent, or Firm—A. G. Douvas

[57] **ABSTRACT**

A hand lever operated grease gun that has both high pressure and high volume modes by changing the mechanical advantage of the lever acting on a dispensing piston. A spring biased pivotal connection between the lever and a forwardly mounted supporting link is shiftable between two positions by depression of the lever against the biasing force of the spring.
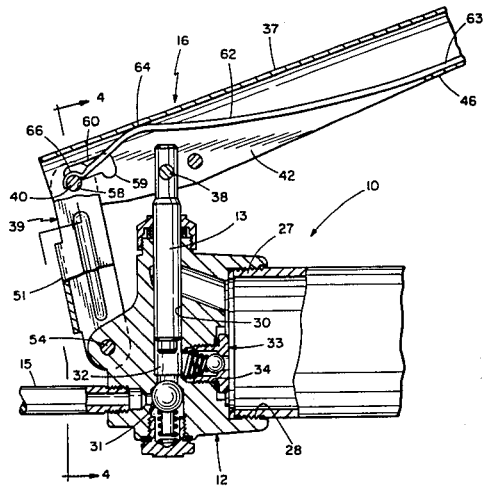
5 Claims, 6 Drawing Figures