Aug. 21, 1956 H. R. TREGILGAS 2,759,598

POCKET SECTIONAL CAPSULE AND PILL HOLDER

Filed June 1, 1954 2 Sheets-Sheet 1

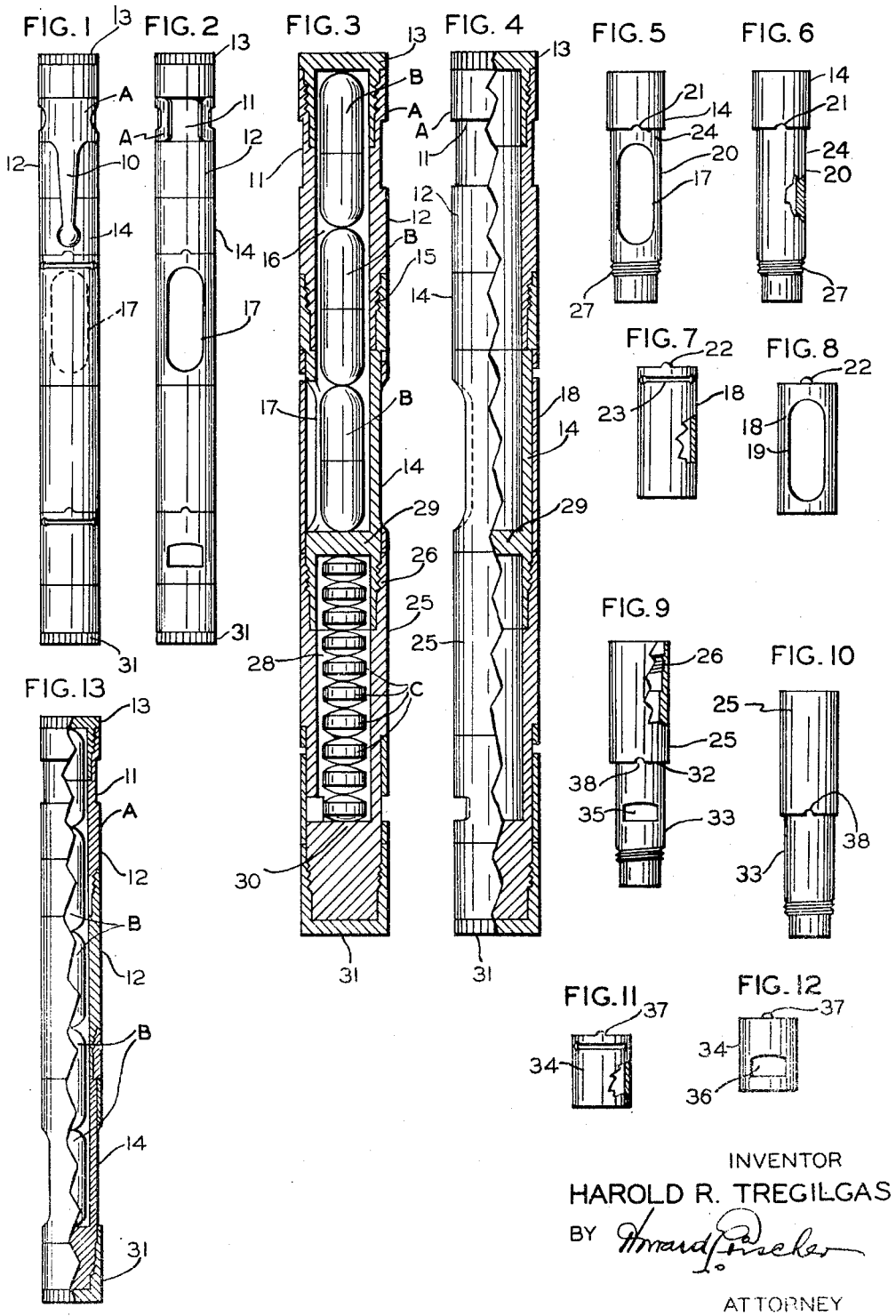

INVENTOR
HAROLD R. TREGILGAS
BY Howard Fischer
ATTORNEY