US009543398B2

(12) **United States Patent**
Laven et al.

(10) **Patent No.: US 9,543,398 B2**
(45) **Date of Patent: Jan. 10, 2017**

(54) **SEMICONDUCTOR SWITCHING DEVICE INCLUDING CHARGE STORAGE STRUCTURE**

(71) Applicant: **Infineon Technologies AG**, Neubiberg (DE)

(72) Inventors: **Johannes Georg Laven**, Taufkirchen (DE); **Anton Mauder**, Kolbermoor (DE); **Matteo Dainese**, Villach (AT); **Franz Hirler**, Isen (DE); **Christian Jaeger**, Munich (DE); **Maximilian Roesch**, St. Magdalen (AT); **Wolfgang Roesner**, Ottobrunn (DE); **Martin Stiftinger**, Stockdorf (DE); **Robert Strenz**, Radebeul (DE)

(73) Assignee: **Infineon Technologies AG**, Neubiberg (DE)

(*) Notice: Subject to any disclaimer, the term of this patent is extended or adjusted under 35 U.S.C. 154(b) by 0 days.

(21) Appl. No.: **14/814,758**

(22) Filed: **Jul. 31, 2015**

(65) **Prior Publication Data**

US 2016/0056251 A1 Feb. 25, 2016

(30) **Foreign Application Priority Data**

Aug. 21, 2014 (DE) 10 2014 111 981

(51) **Int. Cl.**
H01L 29/423 (2006.01)
H01L 27/02 (2006.01)
(Continued)

(52) **U.S. Cl.**
CPC ... ***H01L 29/42344*** (2013.01); ***H01L 21/28273*** (2013.01); ***H01L 21/28282*** (2013.01); ***H01L 27/0207*** (2013.01); ***H01L 27/0623*** (2013.01); ***H01L 27/11521*** (2013.01); ***H01L 27/11568*** (2013.01); ***H01L 27/11573*** (2013.01);
(Continued)

(58) **Field of Classification Search**
CPC H01L 29/42344; H01L 29/42352; H01L 29/7813
See application file for complete search history.

(56) **References Cited**

U.S. PATENT DOCUMENTS

6,664,587 B2 12/2003 Guterman et al.
8,247,865 B2 8/2012 Hirler
(Continued)

FOREIGN PATENT DOCUMENTS

WO 02/13257 A2 2/2002

Primary Examiner — Daniel Shook
(74) *Attorney, Agent, or Firm* — Eschweiler & Associates, LLC

(57) **ABSTRACT**

A semiconductor switching device includes a first load terminal electrically connected to source zones of transistor cells. The source zones form first pn junctions with body zones. A second load terminal is electrically connected to a drain construction that forms second pn junctions with the body zones. Control structures, which include a control electrode and charge storage structures, directly adjoin the body zones. The control electrode controls a load current through the body zones. The charge storage structures insulate the control electrode from the body zones and contain a control charge adapted to induce inversion channels in the body zones in the absence of a potential difference between the control electrode and the first load electrode.
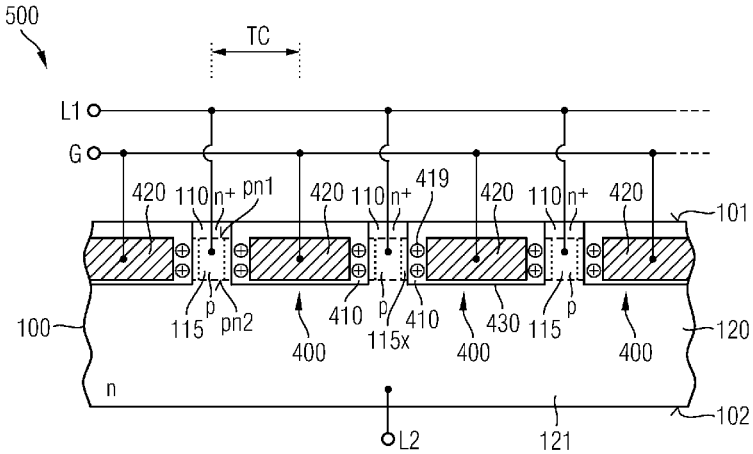
22 Claims, 23 Drawing Sheets