US009636798B1

(12) **United States Patent**
Romanoff et al.

(10) **Patent No.: US 9,636,798 B1**
(45) **Date of Patent: May 2, 2017**

(54) **CONTOUR FOLLOWER APPARATUS AND RELATED SYSTEMS AND METHODS**

(71) Applicant: **Flow International Corporation**, Kent, WA (US)

(72) Inventors: **Ethan E. Romanoff**, Bonney Lake, WA (US); **Kenneth E. Claeys**, Kent, WA (US); **Kirby J. Eide**, Des Moines, WA (US)

(73) Assignee: **Flow International Corporation**, Kent, WA (US)

(*) Notice: Subject to any disclaimer, the term of this patent is extended or adjusted under 35 U.S.C. 154(b) by 0 days.

(21) Appl. No.: **14/921,394**

(22) Filed: **Oct. 23, 2015**

(51) **Int. Cl.**
B24C 1/04 (2006.01)

(52) **U.S. Cl.**
CPC ***B24C 1/045*** (2013.01)

(58) **Field of Classification Search**
CPC B24C 1/045; B24C 1/086; B24C 1/003; B24C 11/00; B24C 5/04
USPC 451/38–40, 5; 83/62.1, 72, 74
See application file for complete search history.

(56) **References Cited**

U.S. PATENT DOCUMENTS

4,786,848 A * 11/1988 Nickerson G05B 19/423 29/404
4,848,042 A 7/1989 Smith et al.
5,643,058 A 7/1997 Erichsen et al.
6,044,308 A * 3/2000 Huissoon B25J 9/1692 700/166
6,649,123 B2 11/2003 Babai
6,752,685 B2 6/2004 Ulrich et al.
6,766,216 B2 7/2004 Erichsen et al.
6,852,002 B2 2/2005 Stewart et al.
7,331,842 B2 2/2008 Sciulli et al.
7,464,630 B2 12/2008 Knaupp et al.
7,703,363 B2 4/2010 Knaupp et al.
7,803,036 B2 9/2010 Sciulli et al.
8,401,692 B2 * 3/2013 Knaupp B24C 1/045 451/38
8,864,553 B2 10/2014 Vigano
9,003,936 B2 4/2015 Chillman et al.
9,008,820 B2 4/2015 Habermann et al.
2001/0018855 A1 * 9/2001 Sciulli B23Q 5/58 83/72
2001/0027708 A1 * 10/2001 Stewart B23Q 5/58 83/177
2002/0066345 A1 6/2002 Shepherd et al.
(Continued)

FOREIGN PATENT DOCUMENTS

EP 2 403 681 B1 12/2012
EP 2 990 159 A1 3/2017

Primary Examiner — George Nguyen
(74) *Attorney, Agent, or Firm* — Seed IP Law Group LLP

(57) **ABSTRACT**

Systems and related methods are provided for maintaining a spatial relationship between a tool of the multi-axis machine (e.g., fluid jet nozzle of a fluid jet cutting machine) and a workpiece to be processed by the tool. An example system includes a contour follower apparatus having a sensor and a gimbal assembly operable with the sensor to sense a deviation between a machine focal point and a gimbal assembly focal point defined by the gimbal assembly as the gimbal assembly rides upon the surface of the workpiece during operation. The system may further include a gimbal mount assembly configured to sense a collision event of the gimbal assembly with another object.
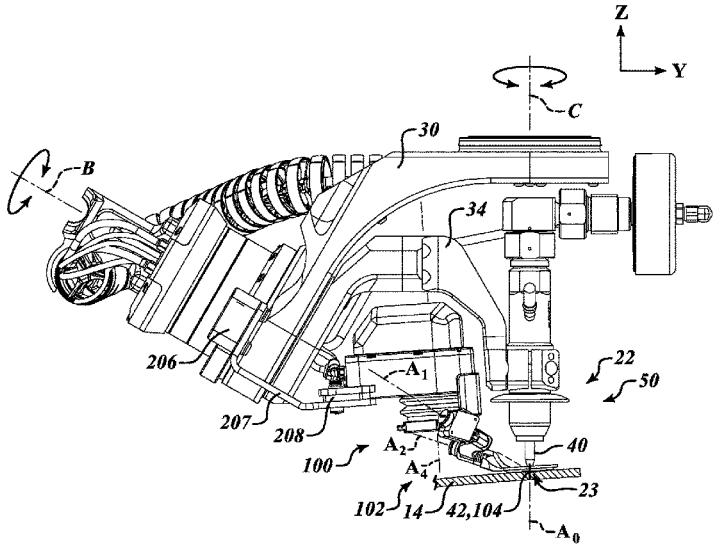
45 Claims, 12 Drawing Sheets