US009636598B2

(12) **United States Patent**
Cai

(10) **Patent No.: US 9,636,598 B2**
(45) **Date of Patent: May 2, 2017**

(54) **SENSING CONTROL SYSTEM FOR ELECTRIC TOY**

(71) Applicants: **Guangdong Alpha Animation & Culture Co., Ltd.**, Shantou (CN); **Guangdong Auldey Animation & Toy Co., Ltd.**, Guangzhou (CN); **Guangzhou Alpha Culture Communications Co., Ltd.**, Guangzhou (CN)

(72) Inventor: **Dongqing Cai**, Shantou (CN)

(73) Assignees: **Guangdong Alpha Animation & Culture Co., Ltd.** (CN); **Guangdong Auldey Animation & Toy Co., Ltd.** (CN); **Gangzhou Alpha Culture Communications Co., Ltd.** (CN)

(*) Notice: Subject to any disclaimer, the term of this patent is extended or adjusted under 35 U.S.C. 154(b) by 0 days.

(21) Appl. No.: **14/440,304**

(22) PCT Filed: **Nov. 7, 2014**

(86) PCT No.: **PCT/CN2014/090535**
§ 371 (c)(1),
(2) Date: **May 1, 2015**

(87) PCT Pub. No.: **WO2015/109879**
PCT Pub. Date: **Jul. 30, 2015**

(65) **Prior Publication Data**

US 2016/0045836 A1 Feb. 18, 2016

(30) **Foreign Application Priority Data**

Jan. 22, 2014 (CN) 2014 1 0029070

(51) **Int. Cl.**
A63H 30/00 (2006.01)
A63H 17/32 (2006.01)
(Continued)

(52) **U.S. Cl.**
CPC ***A63H 29/24*** (2013.01); ***A63H 17/32*** (2013.01); ***A63H 29/22*** (2013.01); ***A63H 30/00*** (2013.01);
(Continued)

(58) **Field of Classification Search**
CPC A63H 17/00; A63H 17/32; A63H 29/00; A63H 29/22; A63H 30/00; A63H 30/02; A63H 2200/00
See application file for complete search history.

(56) **References Cited**

U.S. PATENT DOCUMENTS

4,479,329 A * 10/1984 Fraden A63H 3/00 446/175
7,442,107 B1 * 10/2008 Ueda A63H 11/20 446/175
(Continued)

FOREIGN PATENT DOCUMENTS

CN 85204392 U 11/1986
CN 101168101 A 4/2008
(Continued)

OTHER PUBLICATIONS

Singapore Written Opinion for Application No. 112015038630 dated Dec. 7, 2015.
(Continued)

Primary Examiner — Gene Kim
Assistant Examiner — Alyssa Hylinski
(74) *Attorney, Agent, or Firm* — Lerner, David, Littenberg, Krumholz & Mentlik, LLP

(57) **ABSTRACT**
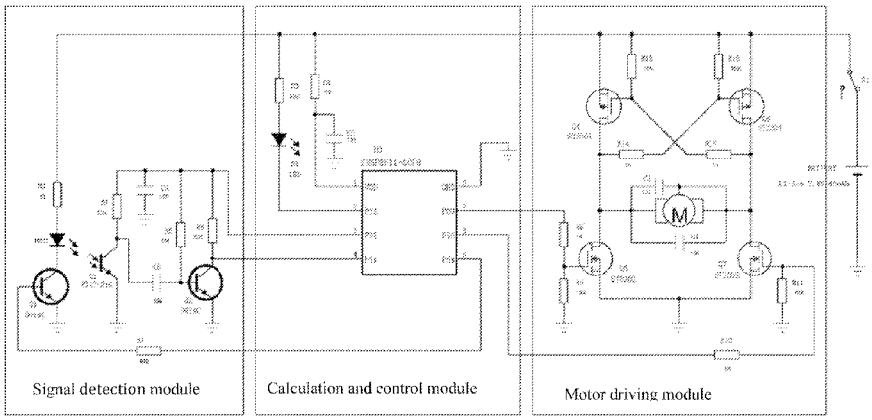
The present invention provides a sensing control system for an electric toy, characterized in that it comprises a signal detection module for receiving an external sensing and then generating a sensing signal; a calculation and control module for receiving the sensing signal and counting a number
(Continued)