US009636098B2

(12) **United States Patent**
Koteles, Jr. et al.

(10) **Patent No.: US 9,636,098 B2**
(45) **Date of Patent: May 2, 2017**

(54) **SURGICAL RETRACTOR WITH SPREADABLE RAKES**

(71) Applicant: **RULTRACT, INC.**, Cleveland, OH (US)

(72) Inventors: **William J. Koteles, Jr.**, Cleveland, OH (US); **Philip M. Rullo, Jr.**, Cleveland, OH (US)

(73) Assignee: **Rultract, Inc.**, Cleveland, OH (US)

(*) Notice: Subject to any disclaimer, the term of this patent is extended or adjusted under 35 U.S.C. 154(b) by 364 days.

(21) Appl. No.: **14/268,333**

(22) Filed: **May 2, 2014**

(65) **Prior Publication Data**

US 2014/0330084 A1 Nov. 6, 2014

Related U.S. Application Data

(60) Provisional application No. 61/819,242, filed on May 3, 2013.

(51) **Int. Cl.**
A61B 17/02 (2006.01)
A61B 17/00 (2006.01)

(52) **U.S. Cl.**
CPC ***A61B 17/0218*** (2013.01); ***A61B 17/0281*** (2013.01); *A61B 17/0206* (2013.01); *A61B 2017/00367* (2013.01)

(58) **Field of Classification Search**
CPC A61B 17/0218; A61B 17/0281; A61B 17/0206; A61B 2017/00367
See application file for complete search history.

(56) **References Cited**

U.S. PATENT DOCUMENTS

569,839 A * 10/1896 Roeloffs A61B 17/02 600/213
815,907 A * 3/1906 Davis A61B 1/32 24/514
2,002,021 A * 5/1935 Rouse A61B 17/6408 606/105
2,702,540 A * 2/1955 Debeh A61B 17/0231 600/218
3,750,652 A * 8/1973 Sherwin A61B 17/025 600/217
4,622,955 A 11/1986 Fakhrai
4,865,019 A * 9/1989 Phillips A61B 17/0206 600/232
4,881,525 A * 11/1989 Williams A61B 17/02 600/217
5,176,129 A * 1/1993 Smith A61B 17/0206 600/217

(Continued)

Primary Examiner — Mary Hoffman
(74) *Attorney, Agent, or Firm* — Renner, Otto, Boisselle & Sklar, LLP

(57) **ABSTRACT**

The present invention relates to a spreadable retractor, including a rake plate having a pair of laterally separated rake mountings; a pair of rakes, one of the rakes moveably mounted to each of the laterally separated rake mountings, wherein each of the rakes comprises a rake shaft extending away from the rake plate; and a rake spreader mounted to the rake plate at a position between the laterally separated rake mountings, the rake spreader operably linked to and configured to spread the pair of rakes apart from each other. The spreadable retractor of the present invention provides the ability for surgical personnel to use a single device to both lift and spread tissues and bones in the vicinity of a surgical incision.
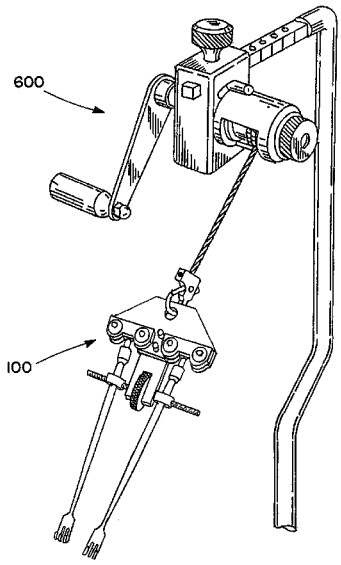
15 Claims, 5 Drawing Sheets