FIG. 1

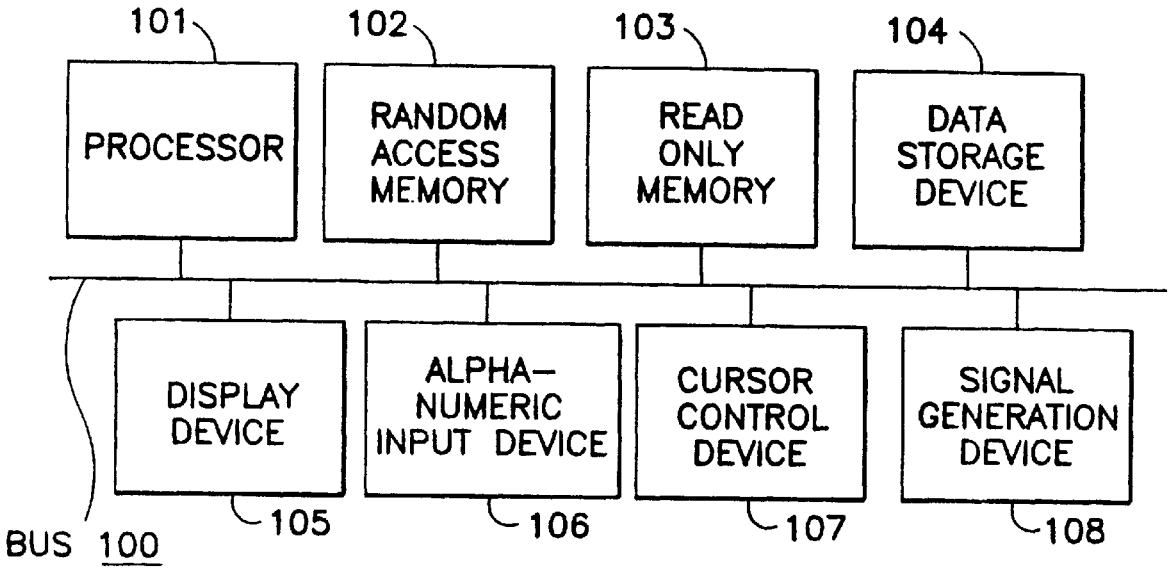
101
PROCESSOR
102
RANDOM ACCESS MEMORY
103
READ ONLY MEMORY
104
DATA STORAGE DEVICE
DISPLAY DEVICE
105
ALPHA-NUMERIC INPUT DEVICE
106
CURSOR CONTROL DEVICE
107
SIGNAL GENERATION DEVICE
108
BUS 100

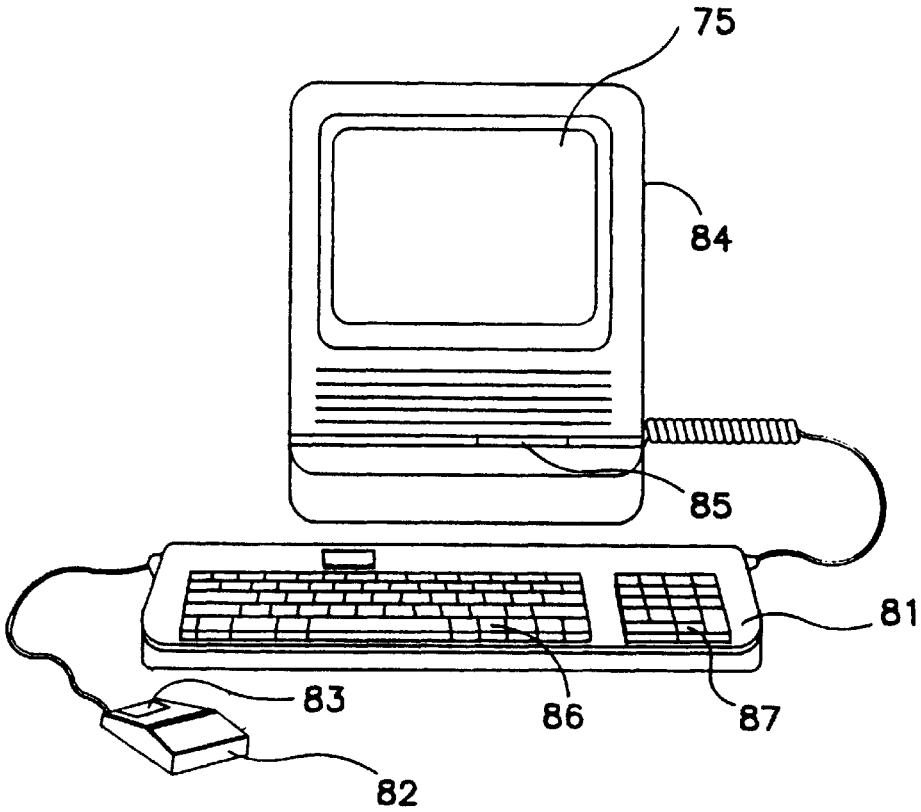
75
84
85
81
83
86
87
82

FIG. 2