US009926798B2

(12) **United States Patent**
Vest

(10) **Patent No.: US 9,926,798 B2**
(45) **Date of Patent: Mar. 27, 2018**

(54) **METHOD FOR MANUFACTURING COMPOSITE FAN ANNULUS FILLER HAVING NANO-COATING**

(71) Applicant: **Rolls-Royce Corporation**, Indianapolis, IN (US)

(72) Inventor: **Wade A. Vest**, Indianapolis, IN (US)

(73) Assignee: **Rolls-Royce Corporation**, Indianapolis, IN (US)

(*) Notice: Subject to any disclaimer, the term of this patent is extended or adjusted under 35 U.S.C. 154(b) by 349 days.

(21) Appl. No.: **14/820,892**

(22) Filed: **Aug. 7, 2015**

(65) **Prior Publication Data**

US 2016/0047261 A1 Feb. 18, 2016

Related U.S. Application Data

(60) Provisional application No. 62/036,900, filed on Aug. 13, 2014.

(51) **Int. Cl.**

F01D 11/08	(2006.01)
F01D 11/00	(2006.01)
C25D 1/02	(2006.01)
C25D 1/08	(2006.01)
C25D 5/56	(2006.01)

(Continued)

(52) **U.S. Cl.**

CPC ***F01D 11/008*** (2013.01); ***C25D 1/02*** (2013.01); ***C25D 1/08*** (2013.01); ***C25D 5/56*** (2013.01); ***F01D 25/28*** (2013.01); *F01D 5/288* (2013.01); *F05D 2220/30* (2013.01); *F05D 2220/32* (2013.01); *F05D 2220/323* (2013.01); *F05D 2220/3212* (2013.01); *F05D 2220/36* (2013.01); *F05D 2230/20* (2013.01); *F05D 2230/30* (2013.01); *F05D 2230/31* (2013.01); *F05D 2230/90* (2013.01); *F05D 2240/24* (2013.01); *F05D 2250/191* (2013.01); *F05D 2300/177* (2013.01); *F05D 2300/43* (2013.01); *F05D 2300/611* (2013.01); *Y02T 50/671* (2013.01)

(58) **Field of Classification Search**

CPC F01D 11/008; F01D 25/28; F05D 2220/32; F05D 2220/3212; F05D 2220/323; F05D 2230/30; F05D 2230/90; F05D 2240/24

USPC 264/129

See application file for complete search history.

(56) **References Cited**

U.S. PATENT DOCUMENTS

5,520,514	A	5/1996	Mareix et al.
6,217,283	B1	4/2001	Ravenhall et al.
7,094,021	B2	8/2006	Haubert

(Continued)

FOREIGN PATENT DOCUMENTS

EP	2090749	A2	8/2009
EP	2108786	A2	10/2009
GB	2484988	A *	5/2012

OTHER PUBLICATIONS

European Search Report, European Patent Application No. 15180607.2-1359, search completed Oct. 30, 2015, 10 pages.

(Continued)

Primary Examiner — William P Fletcher, III

(74) *Attorney, Agent, or Firm* — Barnes & Thornburg LLP

(57) **ABSTRACT**

A method of making a fan annulus filler for use in a fan assembly of a gas turbine engine may include an annulus filler body formed of a polymer. The annulus filler body may include a surface coated with a nanocrystalline coating to form a flow surface.
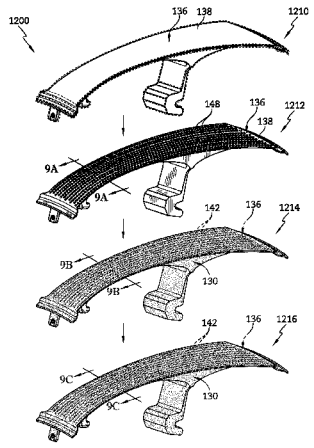
16 Claims, 6 Drawing Sheets