Jan. 7, 1936. C. N. POGUE 2,026,798

CARBURETOR

Filed Sept. 27, 1935 2 Sheets-Sheet 1

Fig. 1

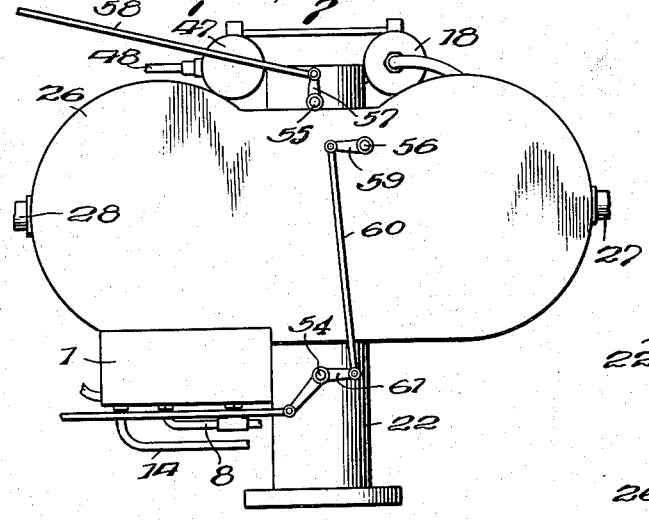

Fig. 5

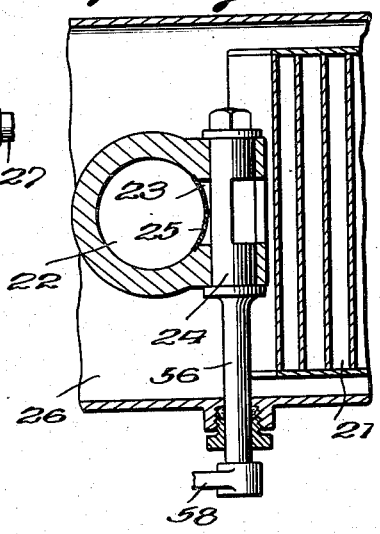

Fig. 2

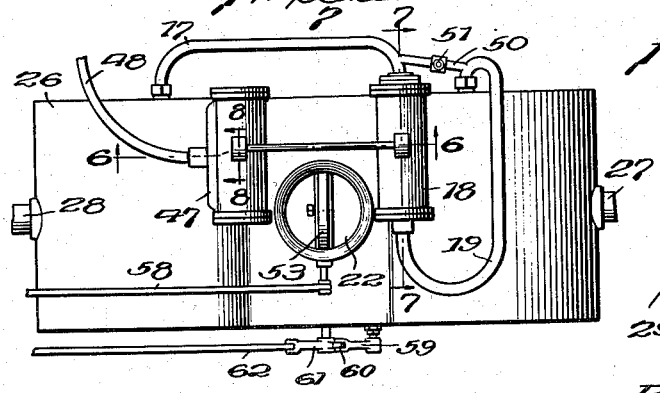

Fig. 8

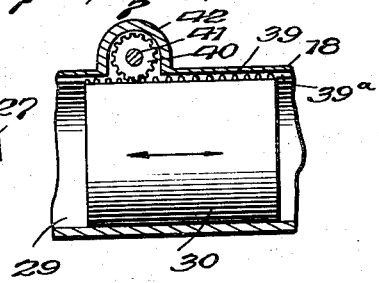

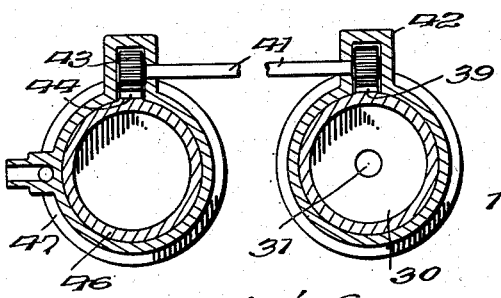

Fig. 6

Fig. 7

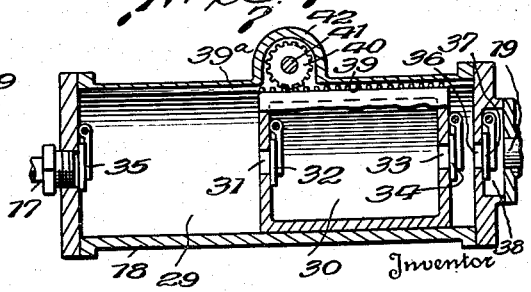

Inventor
Charles N. Pogue,

By Pennie Davis Marvin & Edmonds
Attorneys