Sept. 5, 1933. P. F. BOEYE 1,925,298

BOX

Original Filed Feb. 18, 1929

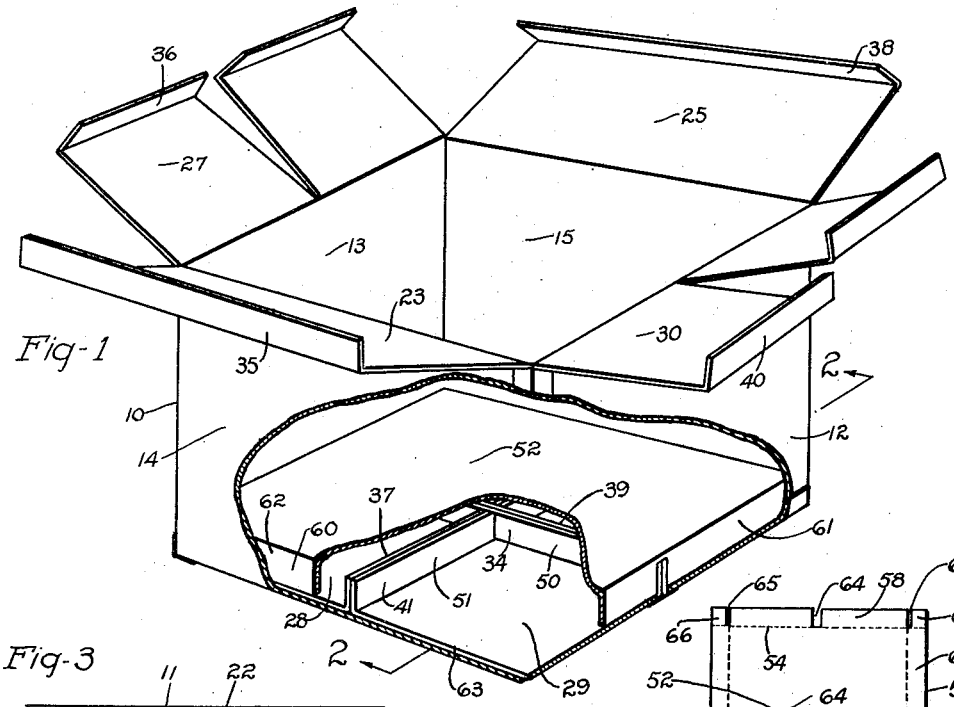

Fig-1

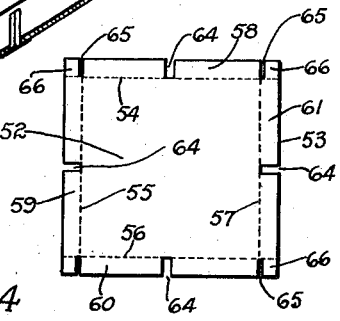

Fig-4

Fig-3

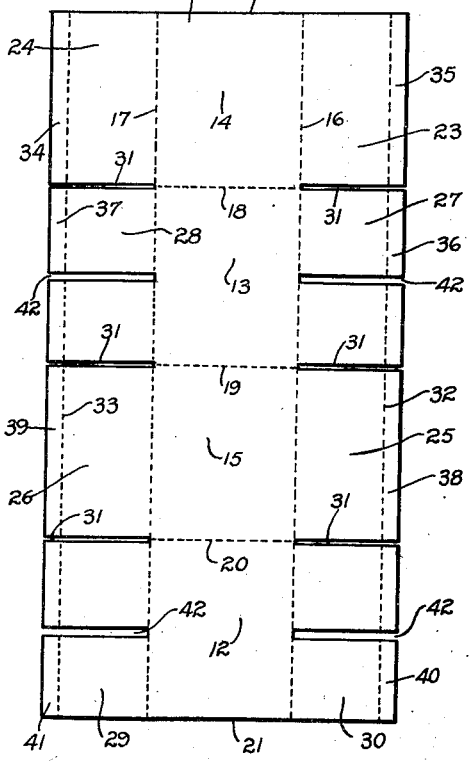

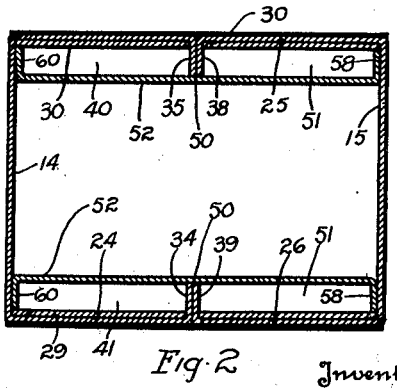

Fig-2

Inventor

Paul F. Boeye

By Alex. Lagaard

Attorney