US006814698B2

(12) **United States Patent**
Barthel et al.

(10) **Patent No.: US 6,814,698 B2**
(45) **Date of Patent: Nov. 9, 2004**

(54) **ENDOSCOPE WITH FLEXIBLE LIGHT GUIDE HAVING OFFSET DISTAL END**

(75) Inventors: **Thomas Clement Barthel**, Becker, MN (US); **Scott Allen Sundet**, Edina, MN (US); **Craig Louis Riedl**, Long Lake, MN (US); **Dinh Thuc Ha**, Blaine, MN (US)

(73) Assignee: **Clarus Medical, LLC**, Minneapolis, MN (US)

(*) Notice: Subject to any disclaimer, the term of this patent is extended or adjusted under 35 U.S.C. 154(b) by 0 days.

(21) Appl. No.: **09/972,812**

(22) Filed: **Oct. 5, 2001**

(65) **Prior Publication Data**

US 2003/0069473 A1 Apr. 10, 2003

(51) **Int. Cl.**[7] **A61B 1/00**
(52) **U.S. Cl.** **600/139**; 129/160
(58) **Field of Search** 600/120, 171, 600/182, 160, 139, 146, 164, 107, 144, 176, 177, 190, 199, 105, 127, 129

(56) **References Cited**

U.S. PATENT DOCUMENTS

1,915,811	A		6/1933	Wolf	
1,995,196	A		3/1935	Wolf	
2,076,741	A		4/1937	Peck	
2,325,831	A		8/1943	Cameron	
3,297,022	A		1/1967	Wallace	
3,677,262	A	*	7/1972	Zukowski	600/120
3,918,439	A	*	11/1975	Zimmer	600/104
4,086,919	A	*	5/1978	Bullard	600/188
4,279,245	A		7/1981	Takagi et al.	
4,327,711	A		5/1982	Takagi	
4,349,032	A	*	9/1982	Koyata	600/139
4,669,172	A		6/1987	Petruzzi	
4,893,613	A	*	1/1990	Hake	600/152
5,003,963	A	*	4/1991	Bullard et al.	600/104
5,127,393	A		7/1992	McFarlin et al.	
5,168,864	A		12/1992	Shockey	
5,183,031	A		2/1993	Rossoff	
5,318,008	A	*	6/1994	Bullard	600/139
5,346,504	A	*	9/1994	Ortiz et al.	606/192
5,394,865	A	*	3/1995	Salerno	600/199
5,512,034	A	*	4/1996	Finn et al.	600/138
5,580,147	A	*	12/1996	Salerno	362/551
5,685,824	A		11/1997	Takei	
5,735,792	A		4/1998	Vanden Hoek et al.	
5,842,973	A	*	12/1998	Bullard	600/194
5,846,183	A		12/1998	Chilcoat	
5,921,917	A		7/1999	Barthel et al.	
5,941,816	A		8/1999	Barthel et al.	
5,951,463	A		9/1999	Lombardi et al.	
6,200,306	B1	*	3/2001	Klostermeyer et al.	600/146
6,203,494	B1	*	3/2001	Moriyama	600/144
6,402,687	B1	*	6/2002	Ouchi	600/139

* cited by examiner

Primary Examiner—Beverly M. Flanagan
(74) *Attorney, Agent, or Firm*—Olson & Hierl, Ltd.

(57) **ABSTRACT**

An optical fiber viewing assembly for an endoscope has a light guide with an elastically flexible portion and a substantially rigid pre-curved distal portion. The viewing assembly is particularly suited for traversing bends of relatively small radii in an endotracheal breathing tube without scraping accumulated biological material from the inner surface of the breathing tube that could collect on the distal end of the light guide and obscure the endoscopic view.
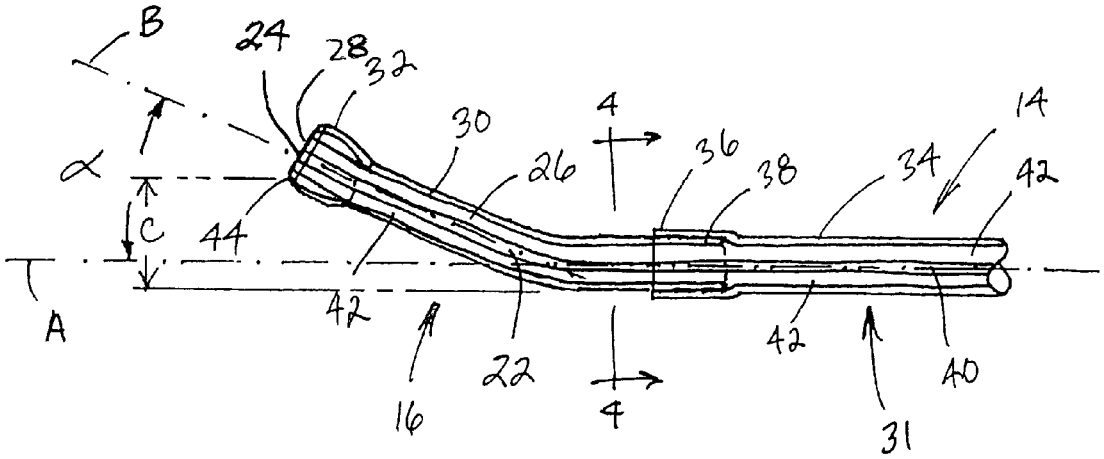
19 Claims, 2 Drawing Sheets