US009411398B2

(12) United States Patent
Ji et al.

(10) Patent No.: US 9,411,398 B2
(45) Date of Patent: Aug. 9, 2016

(54) **ELECTRONIC DEVICE AND METHOD TO EXTEND BATTERY LIFE**

(71) Applicant: **INTEL CORPORATION**, Santa Clara, CA (US)

(72) Inventors: **Gang Ji**, Santa Clara, CA (US); **Alexander B. Uan-Zo-Li**, Hillsboro, OR (US); **Jorge P. Rodriguez**, Portland, OR (US); **Andy Keates**, Los Gatos, CA (US); **Vasudevan Srinivasan**, Hillsboro, OR (US)

(73) Assignee: **INTEL CORPORATION**, Santa Clara, CA (US)

(*) Notice: Subject to any disclaimer, the term of this patent is extended or adjusted under 35 U.S.C. 154(b) by 577 days.

(21) Appl. No.: **13/630,846**

(22) Filed: **Sep. 28, 2012**

(65) **Prior Publication Data**

US 2014/0095897 A1 Apr. 3, 2014

(51) **Int. Cl.**
G06F 1/32 (2006.01)
G06F 1/26 (2006.01)

(52) **U.S. Cl.**
CPC ***G06F 1/3212*** (2013.01); ***G06F 1/324*** (2013.01); *Y02B 60/1217* (2013.01); *Y02B 60/1292* (2013.01)

(58) **Field of Classification Search**
CPC ... G06F 1/3212; G06F 1/3206; G06F 1/3234; G06F 1/324; G06F 1/32; G06F 1/26
USPC 713/300
See application file for complete search history.

(56) **References Cited**

U.S. PATENT DOCUMENTS

6,714,016	B2 *	3/2004	Odaohhara et al.	324/427
6,928,559	B1 *	8/2005	Beard	713/300
7,698,575	B2	4/2010	Samson	
7,779,280	B2 *	8/2010	Shuster	713/320
8,254,868	B2 *	8/2012	Constien et al.	455/343.1
2005/0114721	A1 *	5/2005	Azadet et al.	713/320
2008/0201587	A1 *	8/2008	Lee	713/320
2010/0085016	A1 *	4/2010	Kim et al.	320/136
2011/0138197	A1	6/2011	Lakshmanan et al.	
2012/0021807	A1 *	1/2012	Book et al.	455/572
2012/0030454	A1 *	2/2012	Book et al.	713/2
2012/0197341	A1	8/2012	Cowley et al.	

FOREIGN PATENT DOCUMENTS

WO	WO 2013/147874	10/2013
WO	2014/052119 A1	4/2014

OTHER PUBLICATIONS

International Search Report and Written Opinion dated Dec. 27, 2013 for corresponding Application No. PCT/US2013/060394.

* cited by examiner

Primary Examiner — Jaweed A Abbaszadeh
Assistant Examiner — Terrell Johnson
(74) *Attorney, Agent, or Firm* — KED & Associates, LLP

(57) **ABSTRACT**

An electronic apparatus is provided that includes a processor, a voltage regulator, a battery controller and an embedded controller. The voltage regulator to receive an input voltage and to provide an output voltage to the processor. The battery controller to store electronic device information and to receive battery information related to a current battery power. The embedded controller to receive the electronic device information and the battery information from the battery controller, and the embedded controller to provide power information to the processor based on the received information.
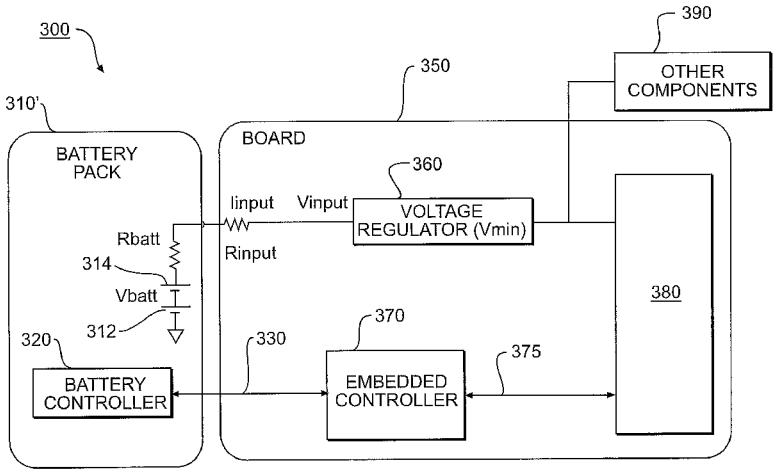
24 Claims, 6 Drawing Sheets