US009411198B2

(12) **United States Patent**
**Lim et al.**

(10) **Patent No.: US 9,411,198 B2**
(45) **Date of Patent: Aug. 9, 2016**

(54) **LIQUID CRYSTAL DISPLAY**

(71) Applicant: **SAMSUNG DISPLAY CO., LTD.**, Yongin, Gyeonggi-Do (KR)

(72) Inventors: **Tae Woo Lim**, Hwaseong-si (KR); **Jong Seong Kim**, Seoul (KR); **Kyung Tae Chae**, Hwaseong-si (KR)

(73) Assignee: **SAMSUNG DISPLAY CO., LTD.**, Yongin, Gyeonggi-Do (KR)

( * ) Notice: Subject to any disclaimer, the term of this patent is extended or adjusted under 35 U.S.C. 154(b) by 33 days.

(21) Appl. No.: **14/213,490**

(22) Filed: **Mar. 14, 2014**

(65) **Prior Publication Data**

US 2014/0293193 A1 Oct. 2, 2014

(30) **Foreign Application Priority Data**

Mar. 29, 2013 (KR) ..... 10-2013-0034892

(51) **Int. Cl.**
***G02F 1/1333*** (2006.01)
***G02F 1/1339*** (2006.01)
***G02F 1/1341*** (2006.01)

(52) **U.S. Cl.**
CPC ..... ***G02F 1/1341*** (2013.01); ***G02F 1/133377*** (2013.01)

(58) **Field of Classification Search**
CPC G02F 1/133377; G02F 1/1341; G02F 1/1334
See application file for complete search history.

(56) **References Cited**

U.S. PATENT DOCUMENTS

5,469,280 A * 11/1995 Jang ..... G02F 1/1347 349/138
2001/0006409 A1* 7/2001 Lee ..... G02F 1/134363 349/156
2010/0231843 A1* 9/2010 Tadaki ..... G02F 1/133377 349/156
2011/0032469 A1* 2/2011 Lee ..... G02F 1/133377 349/187
2013/0335664 A1* 12/2013 Shim ..... G02F 1/1339 349/43
2014/0152948 A1* 6/2014 Chae ..... G02F 1/133377 349/110
2014/0267966 A1* 9/2014 Won ..... G02F 1/133377 349/42
2014/0267984 A1* 9/2014 Lim ..... G02F 1/133377 349/86
2014/0268000 A1* 9/2014 Lim ..... G02F 1/1339 349/153
2015/0049286 A1* 2/2015 Kim ..... G02F 1/133377 349/110

* cited by examiner

*Primary Examiner* — Ryan Crockett
(74) *Attorney, Agent, or Firm* — F. Chau & Associates, LLC

(57) **ABSTRACT**

A liquid crystal display includes a pixel electrode disposed on an insulating substrate; a plurality of microcavities disposed over the pixel electrode; a plurality of liquid crystal injection holes connected to the plurality of microcavities that form a path through which a liquid crystal is injected; a common electrode that covers the microcavities; a partition wall structure that divides the plurality of liquid crystal injection holes; and a roof layer disposed over the common electrode that covers the common electrode and the microcavities, and comprises an organic material.
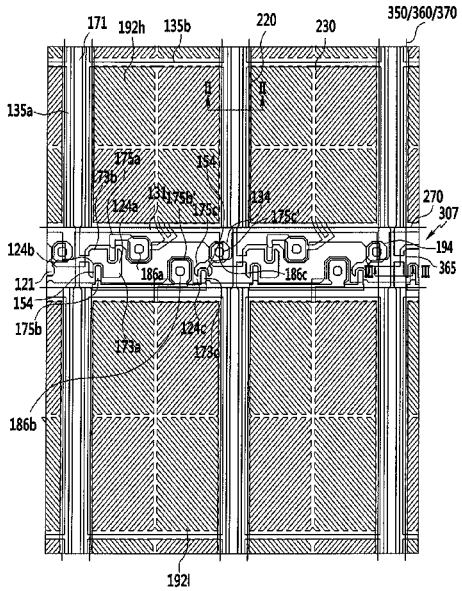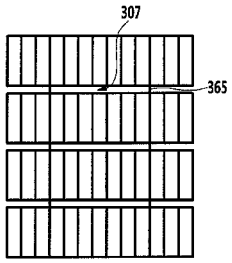
**7 Claims, 9 Drawing Sheets**