US009510798B2

(12) **United States Patent**
Mao et al.

(10) **Patent No.: US 9,510,798 B2**
(45) **Date of Patent: Dec. 6, 2016**

(54) **APPARATUS FOR COUNTERBALANCING A ROTATING ARM IN AN IMAGING SYSTEM**

(71) Applicant: **General Electric Company**, Schenectady, NY (US)

(72) Inventors: **Ying Mao**, Niskayuna, NY (US); **Romain Moulin**, Buc (FR)

(73) Assignee: **General Electric Company**, Niskayuna, NY (US)

(*) Notice: Subject to any disclaimer, the term of this patent is extended or adjusted under 35 U.S.C. 154(b) by 165 days.

(21) Appl. No.: **14/502,333**

(22) Filed: **Sep. 30, 2014**

(65) **Prior Publication Data**

US 2016/0089093 A1 Mar. 31, 2016

(51) **Int. Cl.**
A61B 6/00 (2006.01)
F16M 11/04 (2006.01)

(52) **U.S. Cl.**
CPC ***A61B 6/4441*** (2013.01); ***A61B 6/447*** (2013.01); ***A61B 6/502*** (2013.01); ***F16M 11/04*** (2013.01)

(58) **Field of Classification Search**
CPC A61B 6/4441; A61B 6/035; A61B 6/4476; A61B 6/447
See application file for complete search history.

(56) **References Cited**

U.S. PATENT DOCUMENTS

3,902,070	A	8/1975	Amor et al.	
4,233,516	A	11/1980	Trepte	
4,955,046	A	9/1990	Siczek et al.	
4,989,229	A	1/1991	Negrelli et al.	
5,050,204	A	9/1991	Siczek et al.	
5,388,141	A *	2/1995	Hove	A61B 6/502 378/196
5,448,607	A	9/1995	McKenna	
6,142,667	A	11/2000	Pattee	
6,979,123	B2	12/2005	Barta et al.	
2010/0329419	A1	12/2010	Blevis	
2012/0219121	A1	8/2012	Simmons et al.	
2012/0224673	A1	9/2012	Barker et al.	

* cited by examiner

Primary Examiner — Hoon Song
(74) *Attorney, Agent, or Firm* — Melissa K. Dobson

(57) **ABSTRACT**

An apparatus for balancing a statically unbalanced system, particularly useful in balancing X-ray and mammography systems having an X-ray source and detector mounted to a rotational arm, includes a spring mechanism which synchronizes the activation of the spring mechanism with the rotation of the arm of the mammography system. The balancing system reduces the amount of torque necessary to rotate the arm and decreases the overall inertia of the system by eliminating the need for counterweights to maintain balance of the system.
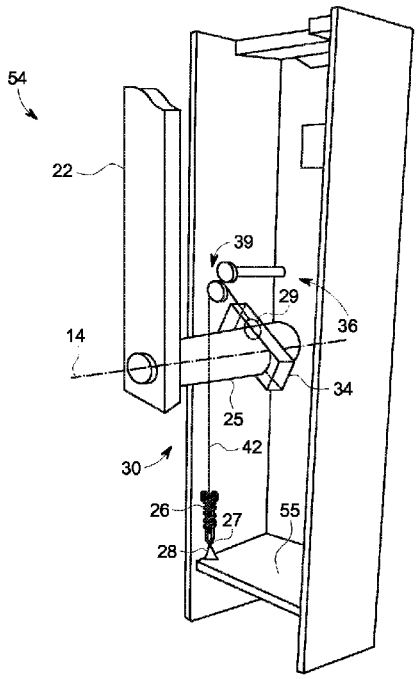
20 Claims, 7 Drawing Sheets