US009410598B2

(12) **United States Patent**
Kabrick et al.

(10) **Patent No.: US 9,410,598 B2**
(45) **Date of Patent: Aug. 9, 2016**

(54) **DRIVE ASSEMBLY FOR MACHINE**

(71) Applicant: **Caterpillar Inc.**, Peoria, IL (US)

(72) Inventors: **Keith A. Kabrick**, Springfield, IL (US); **Christopher P. Braet**, Washington, IL (US); **Trent Thum**, Wexford, PA (US); **Brandon Mann**, Monticello, IL (US); **Vanyo N. Kirov**, Milwaukee, WI (US); **Timothy S. Stoakes**, Naperville, IL (US); **Brian C. Boguski**, Edwards, IL (US); **Daniel J. Reed**, Brimfield, IL (US); **Timothy F. Nusz**, Wyoming, IL (US)

(73) Assignee: **Caterpillar Inc.**, Peoria, IL (US)

(*) Notice: Subject to any disclaimer, the term of this patent is extended or adjusted under 35 U.S.C. 154(b) by 0 days.

(21) Appl. No.: **14/715,624**

(22) Filed: **May 19, 2015**

(65) **Prior Publication Data**

US 2015/0252875 A1 Sep. 10, 2015

(51) **Int. Cl.**

F16H 57/12	(2006.01)
F16H 1/28	(2006.01)
F16H 1/32	(2006.01)
F16H 3/44	(2006.01)
F16H 57/08	(2006.01)

(52) **U.S. Cl.**

CPC ***F16H 1/28*** (2013.01); ***F16H 57/12*** (2013.01); *F16H 2001/326* (2013.01); *F16H 2003/442* (2013.01); *F16H 2057/085* (2013.01); *F16H 2057/126* (2013.01); *F16H 2057/127* (2013.01)

(58) **Field of Classification Search**

None

See application file for complete search history.

(56) **References Cited**

U.S. PATENT DOCUMENTS

2,939,558	A *	6/1960	Schjolin	F16D 25/0638 192/106 F
2,963,923	A	12/1960	Kelley et al.	
3,905,661	A *	9/1975	Orr	F16C 19/54 180/9.62
3,969,950	A	7/1976	Rau et al.	
4,082,299	A	4/1978	Sly et al.	
4,166,659	A	9/1979	Gleichman	
5,480,361	A	1/1996	Murakami et al.	
7,748,499	B2	7/2010	Selever et al.	
8,376,627	B2	2/2013	Oakley et al.	

FOREIGN PATENT DOCUMENTS

DE	19852394	5/2000
EP	0823346	2/1998

* cited by examiner

Primary Examiner — Justin Holmes

(57) **ABSTRACT**

A final drive assembly for a machine includes an input shaft drivably coupled to a prime mover. The input shaft is coupled to and drives a first stage gear assembly. The first stage gear assembly further drives a second stage gear assembly. The first and second stage gear assemblies drive a ring gear which is coupled to a wheel of the machine. The first and second stage gear assemblies are disposed between a first bearing assembly and a second bearing assembly. A spring member preloads the first bearing assembly to limit an axial movement of the first and second stage gear assemblies.
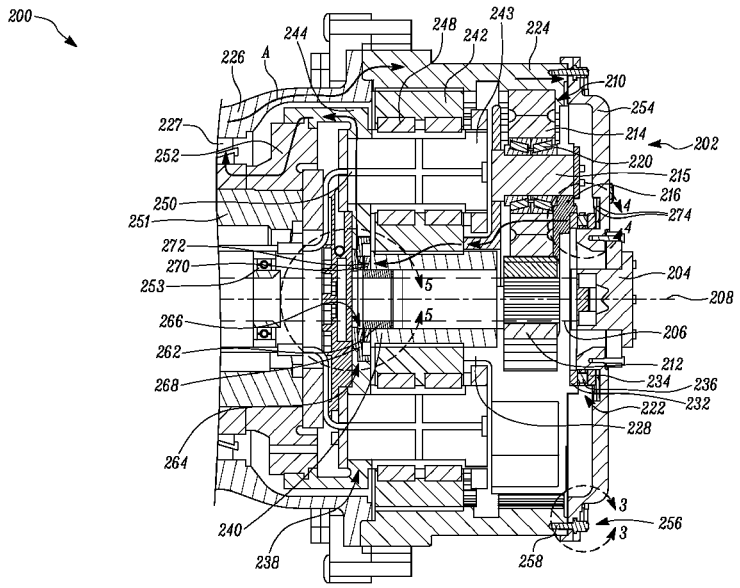
1 Claim, 5 Drawing Sheets