US009410398B2

(12) **United States Patent**
O'Malley et al.

(10) **Patent No.: US 9,410,398 B2**
(45) **Date of Patent: Aug. 9, 2016**

(54) **DOWNHOLE SYSTEM HAVING COMPRESSABLE AND EXPANDABLE MEMBER TO COVER PORT AND METHOD OF DISPLACING CEMENT USING MEMBER**

(71) Applicants: **Edward J. O'Malley**, Houston, TX (US); **James G King**, Kingwood, TX (US); **Charles C. Johnson**, League City, TX (US)

(72) Inventors: **Edward J. O'Malley**, Houston, TX (US); **James G King**, Kingwood, TX (US); **Charles C. Johnson**, League City, TX (US)

(73) Assignee: **BAKER HUGHES INCORPORATED**, Houston, TX (US)

(*) Notice: Subject to any disclaimer, the term of this patent is extended or adjusted under 35 U.S.C. 154(b) by 263 days.

(21) Appl. No.: **14/039,459**

(22) Filed: **Sep. 27, 2013**

(65) **Prior Publication Data**

US 2015/0090448 A1 Apr. 2, 2015

(51) **Int. Cl.**

E21B 43/28	(2006.01)
E21B 34/06	(2006.01)
E21B 43/114	(2006.01)
E21B 43/26	(2006.01)
E21B 34/00	(2006.01)

(52) **U.S. Cl.**

CPC ***E21B 34/063*** (2013.01); ***E21B 43/114*** (2013.01); ***E21B 43/26*** (2013.01); *E21B 2034/007* (2013.01)

(58) **Field of Classification Search**

CPC E21B 23/00; E21B 23/06; E21B 33/1208; E21B 43/28

See application file for complete search history.

(56) **References Cited**

U.S. PATENT DOCUMENTS

3,273,641	A	9/1966	Bourne	
5,094,103	A	3/1992	Wicks, III	
5,515,915	A	5/1996	Jones et al.	
6,619,398	B2	9/2003	MacKenzie et al.	
6,662,873	B1	12/2003	Nguyen et al.	
6,755,249	B2	6/2004	Robison et al.	
6,834,725	B2	12/2004	Whanger et al.	
7,243,732	B2	7/2007	Richard	
7,318,481	B2	1/2008	Richard	
7,392,852	B2	7/2008	Richard	
7,578,347	B2	8/2009	Bosma	
7,690,437	B2 *	4/2010	Guillot et al.	166/387
7,784,532	B2	8/2010	Sevre et al.	
7,866,393	B2	1/2011	Badalamenti et al.	

(Continued)

FOREIGN PATENT DOCUMENTS

AU	2011218707	A1	9/2011
WO	2011131306	A1	10/2011

(Continued)

OTHER PUBLICATIONS

"FracPoint MP Sleeve with DirectConnect Ports"; Baker Hughes Incorporated; Trade Show Material, 2012; 4 pages.

(Continued)

Primary Examiner — Catherine Loikith
(74) *Attorney, Agent, or Firm* — Cantor Colburn LLP

(57) **ABSTRACT**

A downhole system including a tubular having a wall with at least one port there through. At least one member arranged to cover the at least one port in a compressed condition thereof. Configured to at least partially displace cement pumped on an exterior of the tubular in a radially expanded condition of the at least one member. Also included is a method of non-ballistically opening ports in a tubular of a downhole system.
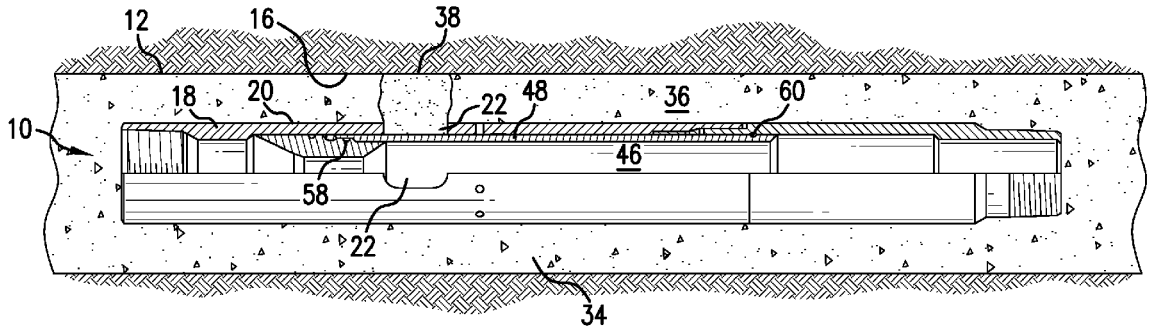
18 Claims, 4 Drawing Sheets