US009409298B2

(12) **United States Patent**
Rosmarin et al.

(10) **Patent No.: US 9,409,298 B2**
(45) **Date of Patent: Aug. 9, 2016**

(54) **FLEXURE ELEMENTS FOR SERIES ELASTIC ACTUATORS AND RELATED METHODS**

(75) Inventors: **Josiah Rosmarin**, Cambridge, MA (US); **Ben Berkowitz**, Sharon, MA (US)

(73) Assignee: **Rethink Robotics, Inc.**, Boston, MA (US)

(*) Notice: Subject to any disclaimer, the term of this patent is extended or adjusted under 35 U.S.C. 154(b) by 910 days.

(21) Appl. No.: **13/446,564**

(22) Filed: **Apr. 13, 2012**

(65) **Prior Publication Data**

US 2013/0275060 A1 Oct. 17, 2013

(51) **Int. Cl.**

G01L 3/00	(2006.01)
B25J 13/08	(2006.01)
B25J 9/16	(2006.01)
B25J 17/00	(2006.01)
G01L 25/00	(2006.01)

(52) **U.S. Cl.**

CPC ***B25J 13/085*** (2013.01); ***B25J 9/1633*** (2013.01); ***B25J 17/00*** (2013.01); *G01L 25/00* (2013.01)

(58) **Field of Classification Search**

USPC 702/43; 73/849

See application file for complete search history.

(56) **References Cited**

U.S. PATENT DOCUMENTS

3,595,123	A *	7/1971	Wurzel	F16B 21/186 411/517
3,665,482	A	5/1972	Cresswell	
4,099,409	A	7/1978	Edmond	
4,183,280	A *	1/1980	Hashimoto	411/518
4,189,951	A	2/1980	Sauter	
4,528,862	A	7/1985	Goldowsky	
4,550,626	A	11/1985	Brouwer	
4,714,388	A	12/1987	Siler	
4,729,258	A	3/1988	Mohri et al.	
4,739,670	A	4/1988	Tomita et al.	
4,804,304	A	2/1989	Tellden	
4,828,453	A	5/1989	Martin et al.	
5,083,896	A	1/1992	Uehara et al.	
5,138,747	A *	8/1992	Oetiker	24/20 R
5,138,904	A	8/1992	Lande et al.	
5,517,874	A	5/1996	Janiszewski	
5,540,630	A	7/1996	Vranish	
5,584,647	A	12/1996	Uehara et al.	
5,650,704	A	7/1997	Pratt et al.	
5,910,720	A	6/1999	Williamson et al.	
6,148,684	A	11/2000	Gardiner	
6,258,002	B1	7/2001	Lippitsch	
6,536,503	B1	3/2003	Anderson et al.	

(Continued)

FOREIGN PATENT DOCUMENTS

CN	104245247	12/2014
EP	0355083 A1	2/1990

(Continued)

OTHER PUBLICATIONS

International Application Serial No. PCT/US2013/035704, International Search Report and Written Opinion mailed on Feb. 25, 2014, 8 pages.

(Continued)

Primary Examiner — Paul D Lee

(74) *Attorney, Agent, or Firm* — Morgan, Lewis & Bockius LLP

(57) **ABSTRACT**

An arcuate metal element for detecting a rotary force and generating a deformation in response thereto.
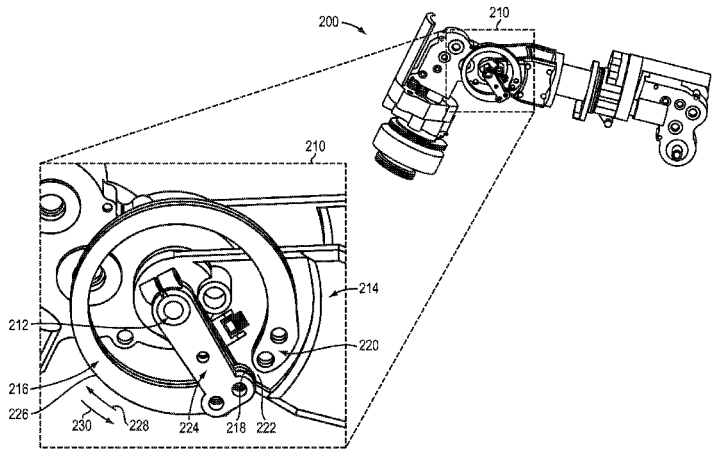
19 Claims, 6 Drawing Sheets