US009409098B2

(12) **United States Patent**
Blackham

(10) **Patent No.: US 9,409,098 B2**
(45) **Date of Patent: Aug. 9, 2016**

(54) **AERODYNAMIC BOARD FOR FINGERS TOY**

(71) Applicant: **Brian Blackham**, Salt Lake City, UT (US)

(72) Inventor: **Brian Blackham**, Salt Lake City, UT (US)

(*) Notice: Subject to any disclaimer, the term of this patent is extended or adjusted under 35 U.S.C. 154(b) by 0 days.

(21) Appl. No.: **14/558,370**

(22) Filed: **Dec. 2, 2014**

(65) **Prior Publication Data**

US 2015/0202539 A1 Jul. 23, 2015

Related U.S. Application Data

(60) Provisional application No. 61/910,531, filed on Dec. 2, 2013.

(51) **Int. Cl.**
A63H 33/00 (2006.01)
A63H 23/00 (2006.01)

(52) **U.S. Cl.**
CPC ***A63H 23/00*** (2013.01)

(58) **Field of Classification Search**
USPC 446/26, 61, 153, 176, 179, 199, 34, 491
See application file for complete search history.

(56) **References Cited**

U.S. PATENT DOCUMENTS

4,923,427	A *	5/1990	Roland	A63H 23/00 114/140
4,938,698	A *	7/1990	Chantry	A63B 69/18 434/253
6,431,943	B1 *	8/2002	Rehkemper	A63H 17/16 446/440
6,540,577	B1 *	4/2003	Nelson	A63H 33/00 446/129
7,931,519	B2 *	4/2011	Fox	A63H 17/25 280/87.042
8,113,895	B2 *	2/2012	Watanabe	B29C 67/0055 114/357
8,123,050	B2 *	2/2012	Carrillo	A47F 7/00 211/85.7
2010/0216368	A1 *	8/2010	Del Principe	A63H 33/40 446/179

OTHER PUBLICATIONS

Ralph Pernot, "Finger Surf" (YouTube video uploaded Sep. 4, 2011, https://www.youtube.com/watch?v=2PJsX7h4uWI) [retrieved online Sep. 8, 2015].*

"Fingersurfing" by House of Lotz (published Jul. 28, 2013, https://www.kickstarter.com/projects/917665757/fingersurfing/description) [retrieved online Sep. 8, 2015].*

* cited by examiner

Primary Examiner — Kurt Fernstrom
(74) *Attorney, Agent, or Firm* — Terrence J. Edwards; TechLaw Ventures, PLLC

(57) **ABSTRACT**

The disclosure extends to methods, systems, and devices for producing a realistic scaled fingertip surfing experience.
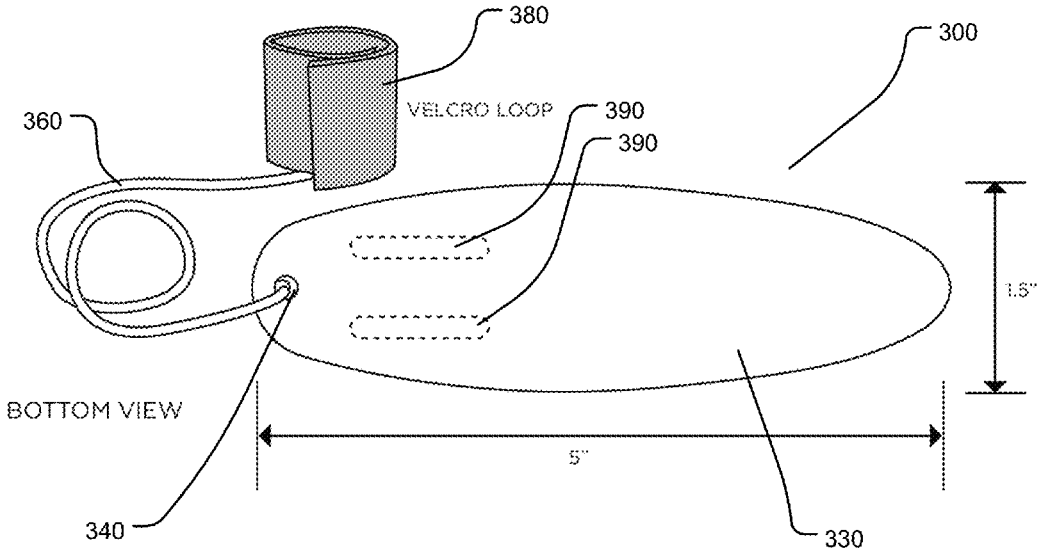
19 Claims, 10 Drawing Sheets