US005306098A

United States Patent [19]

Lewis

[11] Patent Number: 5,306,098

[45] Date of Patent: Apr. 26, 1994

[54] PLASTIC DRIVE FASTENER

[75] Inventor: Jeffrey C. Lewis, Rochester Hills, Mich.

[73] Assignee: TRW Inc., Cleveland, Ohio

[21] Appl. No.: 12,237

[22] Filed: Feb. 2, 1993

[51] Int. Cl.[5] F16B 19/00

[52] U.S. Cl. 411/510; 411/913

[58] Field of Search 411/508-510, 411/338, 339, 913

[56] References Cited

U.S. PATENT DOCUMENTS

3,494,244	2/1970	Wayland .	
4,381,633	5/1983	MacLeod	411/510 X
4,396,329	8/1983	Wollar	411/510 X
4,704,059	11/1987	Nakama et al.	411/913 X
4,762,437	8/1988	Mitomi	411/913 X
5,011,356	4/1991	Fernandez	411/508 X
5,039,267	8/1991	Wollar .	

FOREIGN PATENT DOCUMENTS

1020694	2/1966	United Kingdom	411/510

Primary Examiner—Neill R. Wilson

Attorney, Agent, or Firm—Fay, Sharpe, Beall, Fagan, Minnich & McKee

[57] ABSTRACT

A one-piece plastic drive fastener comprises an enlarged head with a rigid cylindrical shank extending therefrom and terminating in a free end. Four circumferentially spaced axial rows of wing elements extend generally radially outwardly from the shank. The wing elements each have the shape of a segment of a thin walled truncated cone with a narrow first end joined to the cylindrical shank and a wider second end spaced outwardly of the shank and inclined toward the head portion. The wing members are freely flexible in the direction toward the head portion with the wing elements in each row being relatively uniformly spaced axially of the shank but axially offset from the wing elements in the next adjacent rows.
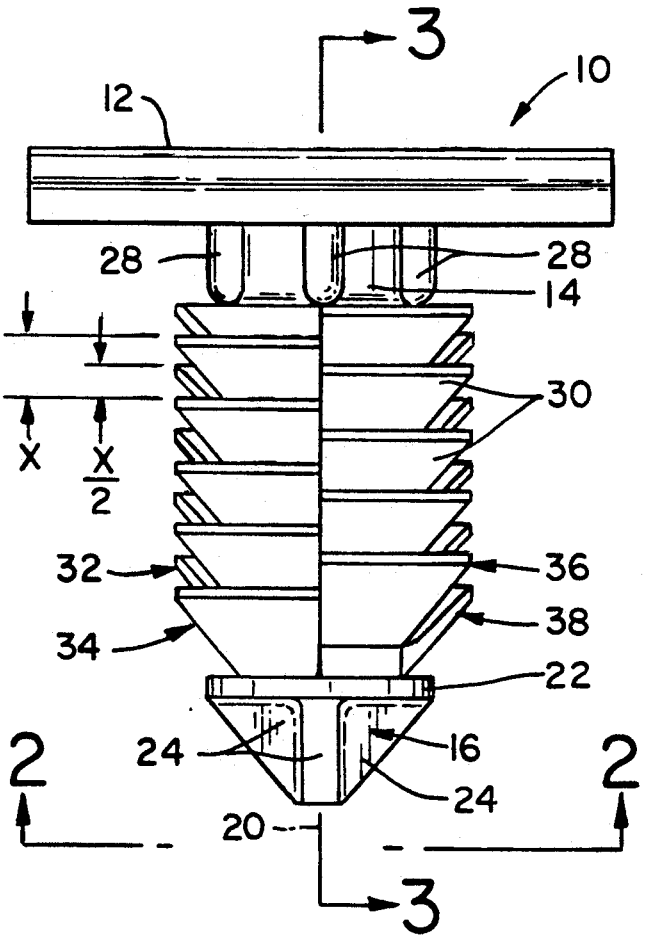
2 Claims, 1 Drawing Sheet