US007004198B1

(12) **United States Patent**
Okandan et al.

(10) **Patent No.: US 7,004,198 B1**
(45) **Date of Patent: Feb. 28, 2006**

(54) **MICRO-FLUIDIC INTERCONNECT**

(75) Inventors: **Murat Okandan**, Albuquerque, NM (US); **Paul C. Galambos**, Albuquerque, NM (US); **Gilbert L. Benavides**, Los Ranchos, NM (US); **Dale L. Hetherington**, Albuquerque, NM (US)

(73) Assignee: **Sandia Corporation**, Albuquerque, NM (US)

(*) Notice: Subject to any disclaimer, the term of this patent is extended or adjusted under 35 U.S.C. 154(b) by 79 days.

(21) Appl. No.: **10/894,636**

(22) Filed: **Jul. 20, 2004**

(51) **Int. Cl.**
F16K 37/00 (2006.01)

(52) **U.S. Cl.** **137/827**; 137/554; 137/833; 204/601; 251/368

(58) **Field of Classification Search** 137/833, 137/554, 827; 251/368; 204/601, 606
See application file for complete search history.

(56) **References Cited**

U.S. PATENT DOCUMENTS

5,501,893	A	3/1996	Laermer et al.	
5,582,701	A *	12/1996	Geis et al.	204/451
5,681,484	A *	10/1997	Zanzucchi et al.	216/2
5,824,204	A *	10/1998	Jerman	204/601
5,876,675	A *	3/1999	Kennedy	422/99
6,136,212	A	10/2000	Mastrangelo et al.	
6,167,910	B1	1/2001	Chow	
6,273,478	B1	8/2001	Benett et al.	
6,321,791	B1	11/2001	Chow	
6,443,179	B1	9/2002	Benavides et al.	
6,488,315	B1	12/2002	Brenner et al.	
6,537,437	B1	3/2003	Galambos et al.	
6,586,885	B1	7/2003	Coll et al.	
6,645,432	B1	11/2003	Anderson et al.	
6,648,015	B1 *	11/2003	Chow	137/557
6,755,211	B1 *	6/2004	O'Connor et al.	137/554
2003/0206832	A1	11/2003	Thiebaud et al.	

OTHER PUBLICATIONS

C. Gonzalez et al., "Micro-Joinery: Concept, Definition and Application to Microsystem Development", Sensors and Actuators A, vol. 66, Apr. 1, 1998 pp. 315-332.
D. Duffy et al., "Rapid Prototyping of Microfluidic Systems in Poly(dimethylsiolxane)", Analytical Chemistry, vol. 70, No. 23, Dec. 1, 1998, pp. 4974-4984.
M. Schuenemann et al., "A Highly Flexible Design and Production Framework for Modularized Microelectromechanical Systems", Sensors and Actuators A, vol. 73, Mar. 9, 1999, pp. 153-168.
C. G. J. Schabmueller et al., "Design and Fabrication of a Microfluidic Circuitboard", J. Micromech. Microeng. vol. 9, No. 2, Jun. 17, 1999.
Byung-Ho Jo et al., "Fabrication of Three-Dimensional Microfluidic Systems by Stacking Molded Polydimethysiloxane (PDMS) Layers", Proceedings of SPIE, vol. 3877 (1999), pp. 222-229.
T. Merkel et al., "A New Technology for Fluidic Microsystems Based on PCB Technology," Sensors and Actuators vol. 77, Oct. 12, 1999, pp. 98-105.

(Continued)

Primary Examiner—A. Michael Chambers
(74) *Attorney, Agent, or Firm*—William R. Conley

(57) **ABSTRACT**

An apparatus for simultaneously aligning and interconnecting microfluidic ports is presented. Such interconnections are required to utilize microfluidic devices fabricated in Micro-Electromechanical-Systems (MEMS) technologies, that have multiple fluidic access ports (e.g. 100 micron diameter) within a small footprint, (e.g. 3 mm×6 mm). Fanout of the small ports of a microfluidic device to a larger diameter (e.g. 500 microns) facilitates packaging and interconnection of the microfluidic device to printed wiring boards, electronics packages, fluidic manifolds etc.
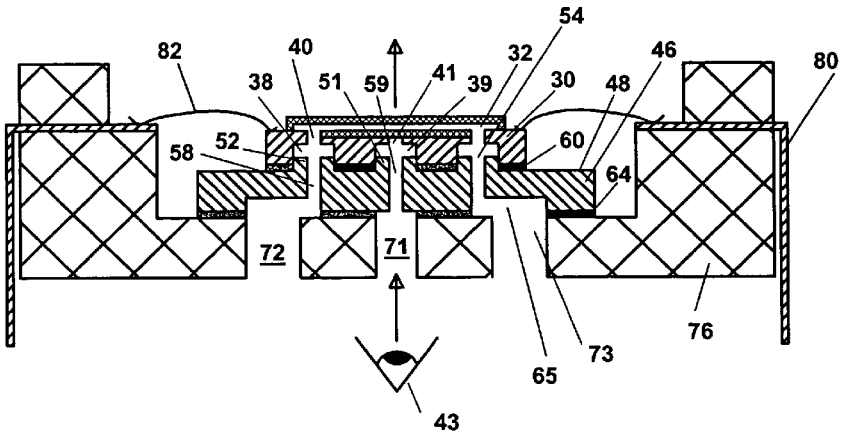
76 Claims, 8 Drawing Sheets