Oct. 10, 1961 H. L. SANDLIN 3,003,798

ANCHORING REINFORCING CABLES OR BRAIDS IN WELL PACKERS

Filed May 20, 1957

FIG. 1.

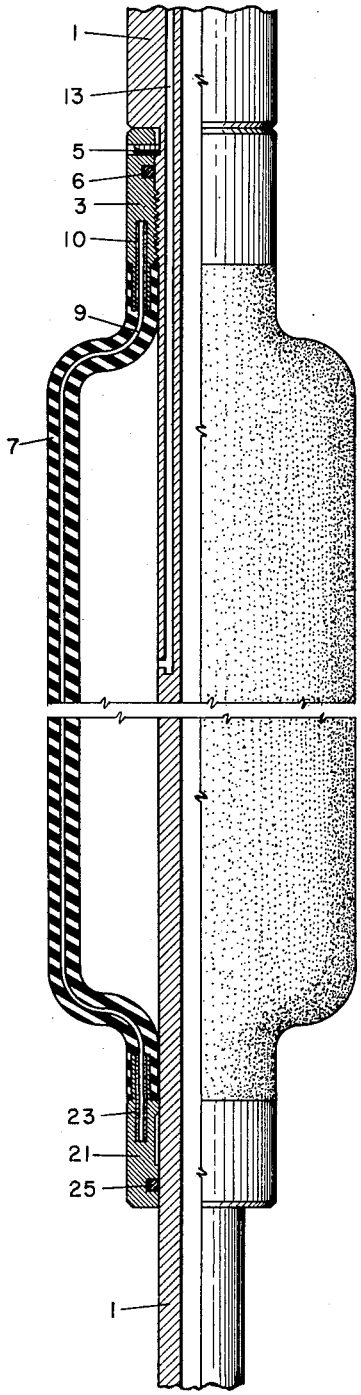

FIG. 2.

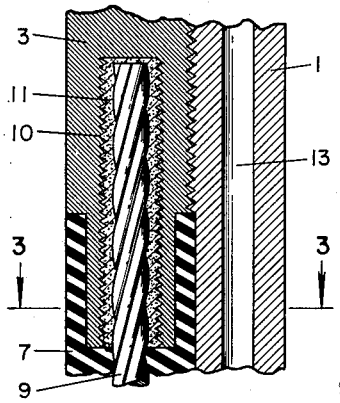

FIG. 3.

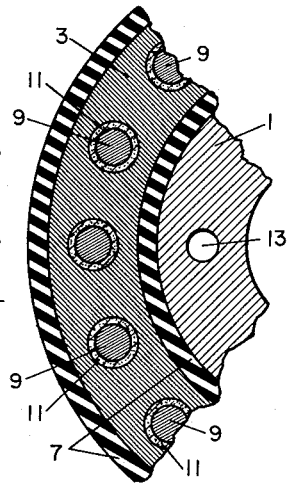

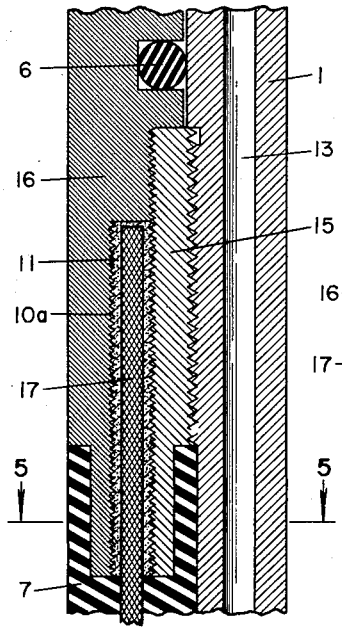

FIG. 4.

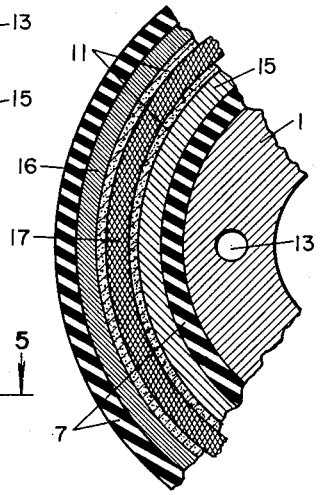

FIG. 5.

INVENTOR.
Herman L. Sandlin,
BY John B. Davidson
ATTORNEY.