Feb. 8, 1955 S. KOCH ET AL 2,701,498

KEYBOARD FOR MUSICAL INSTRUMENTS

Filed Dec. 21, 1949 2 Sheets-Sheet 1

Fig. 1

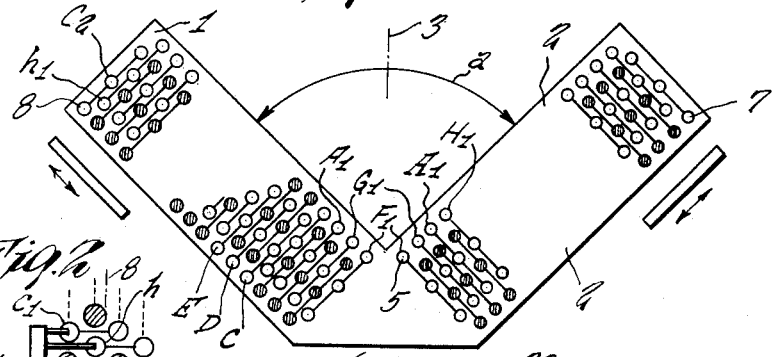

Fig. 2

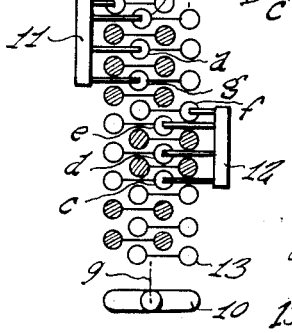

Fig. 4

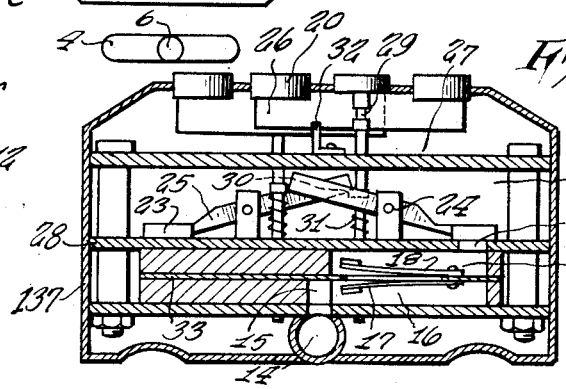

Fig. 3

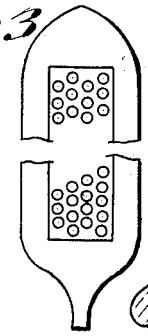

Fig. 5

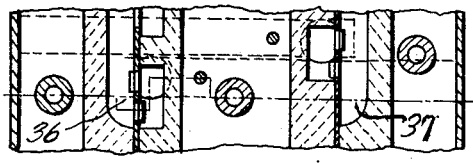

Fig. 6

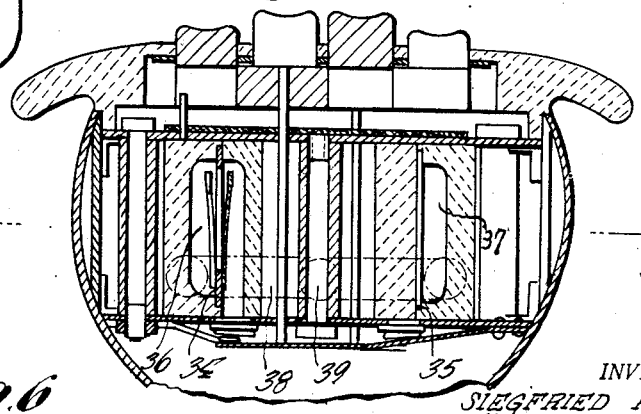

INVENTORS
SIEGFRIED KOCH &
BY FRIEDRICH FEILHABER
Armand E. Mutterer
ATTORNEY