US007789697B2

(12) **United States Patent**
Fiennes

(10) **Patent No.: US 7,789,697 B2**
(45) **Date of Patent: Sep. 7, 2010**

(54) **PLUG DETECTION MECHANISMS**

(75) Inventor: **Hugo Fiennes**, Mountain View, CA (US)

(73) Assignee: **Apple Inc.**, Cupertino, CA (US)

(*) Notice: Subject to any disclaimer, the term of this patent is extended or adjusted under 35 U.S.C. 154(b) by 0 days.

(21) Appl. No.: **12/156,396**

(22) Filed: **May 29, 2008**

(65) **Prior Publication Data**

US 2008/0305676 A1 Dec. 11, 2008

Related U.S. Application Data

(60) Provisional application No. 60/934,234, filed on Jun. 11, 2007.

(51) **Int. Cl.**
H01R 3/00 (2006.01)

(52) **U.S. Cl.** **439/489**; 439/188

(58) **Field of Classification Search** 439/489, 439/188, 668, 669, 490, 955; 200/51.1
See application file for complete search history.

(56) **References Cited**

U.S. PATENT DOCUMENTS

3,852,703 A * 12/1974 Carney et al. 439/372
4,367,907 A * 1/1983 Buck 439/188
4,392,708 A * 7/1983 Bailey et al. 439/668
4,548,447 A * 10/1985 Dinsmore 439/43
4,658,212 A * 4/1987 Ozawa et al. 324/754
4,758,536 A * 7/1988 Miller et al. 439/138
4,770,639 A * 9/1988 Lau 439/61
4,840,568 A * 6/1989 Burroughs et al. 439/49
4,954,096 A * 9/1990 Frank 439/346
4,975,087 A * 12/1990 Williams et al. 439/668
5,145,416 A * 9/1992 Cruise et al. 439/668
5,170,327 A * 12/1992 Burroughs 361/728
5,393,249 A * 2/1995 Morgenstern et al. 439/668
5,429,519 A * 7/1995 Murakami et al. 439/310
5,634,822 A * 6/1997 Gunell 439/668
5,831,438 A * 11/1998 Okura 324/538
5,938,478 A * 8/1999 Werner 439/668
6,116,935 A * 9/2000 Fukuda 439/310
6,123,575 A * 9/2000 Huang et al. 439/489
6,422,902 B1 * 7/2002 Ogren et al. 439/668
6,835,080 B1 * 12/2004 Chang 439/188
6,855,003 B1 * 2/2005 Wyant 439/502
6,866,527 B2 * 3/2005 Potega 439/218
6,869,316 B2 * 3/2005 Hinkle et al. 439/675
6,945,803 B2 * 9/2005 Potega 439/218
6,981,887 B1 * 1/2006 Mese et al. 439/244
7,083,475 B2 * 8/2006 Henneberger et al. 439/668
7,128,591 B2 * 10/2006 Tsai 439/188
7,150,641 B2 * 12/2006 Tsai 439/188
7,234,974 B2 * 6/2007 Henneberger et al. 439/668

(Continued)

Primary Examiner—T C Patel
Assistant Examiner—Vladimir Imas
(74) *Attorney, Agent, or Firm*—Blakely, Sokoloff, Taylor & Zafman LLP

(57) **ABSTRACT**

Plug detection mechanisms can be provided for detecting when a plug of an accessory component is present within a jack of an electronic device. A detect contact and a jack contact may be positioned within a receptacle of the jack such that a signal path may be created through the plug and between the detect contact and the jack contact when the plug is present within the receptacle of the jack. The detect contact may be biased to exert a retention force on the plug. The detect contact may be positioned to contact the plug within an indent of the plug.
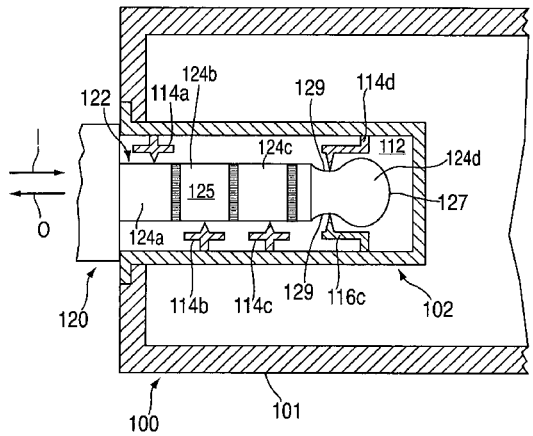
29 Claims, 5 Drawing Sheets