E. V. HARTFORD.

ELECTRICAL STARTER.

APPLICATION FILED MAR. 12, 1913.

1,185,197.

Patented May 30, 1916.

2 SHEETS—SHEET 1.

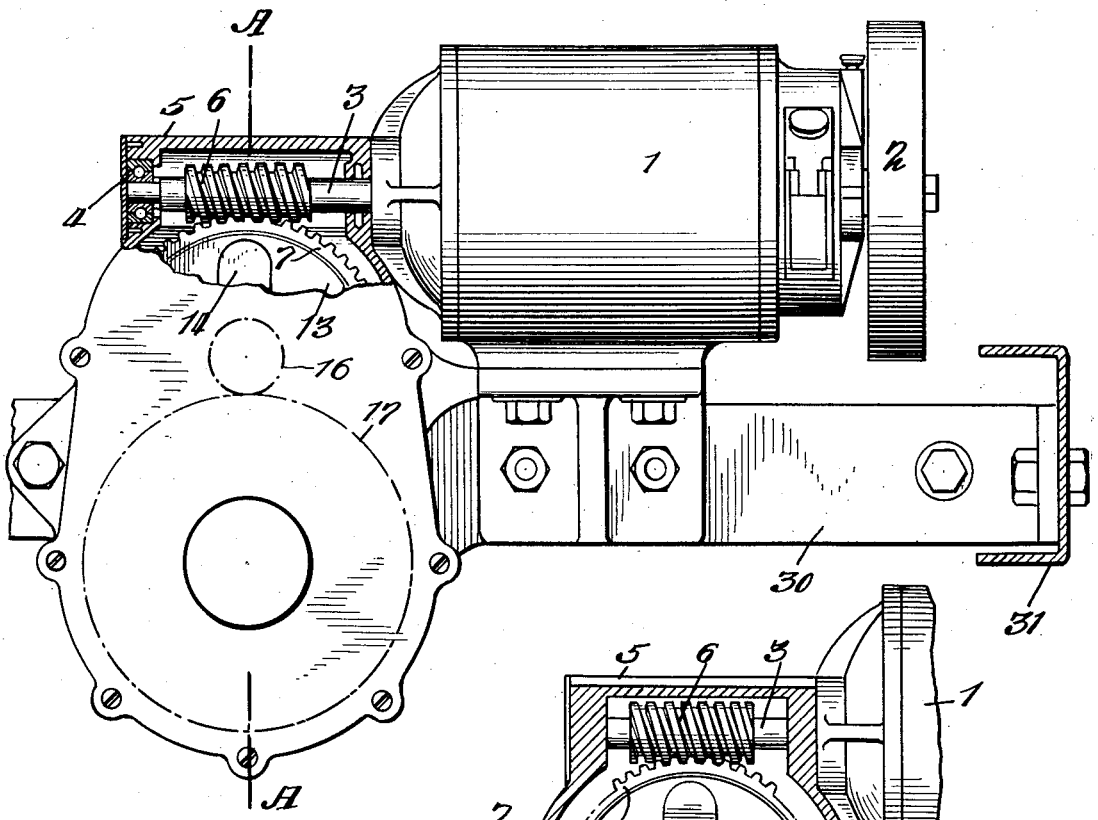


Fig. 1.

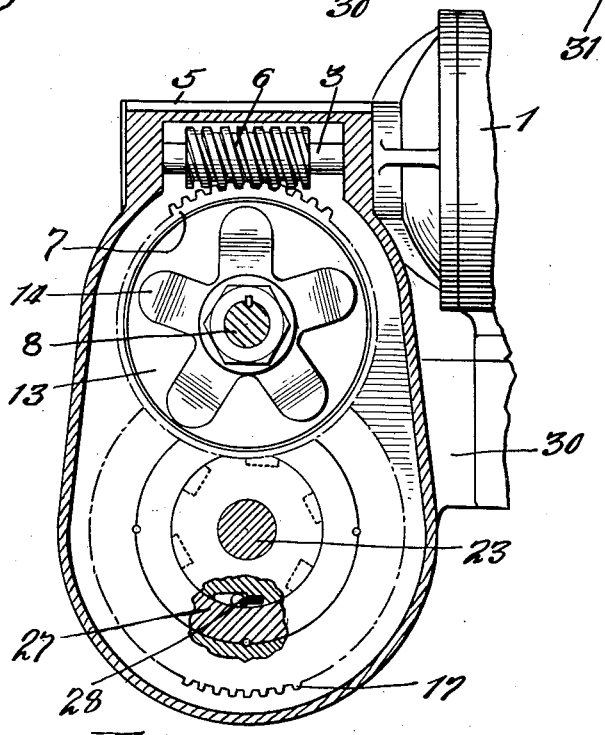


Fig. 2.

Witnesses:
Harry B. Hebig
Wm. C. Dunn

Inventor
Edward Vassallo Hartford
By his Attorney
Clifford E. Dunn