United States Patent [19]

Stover

[11] **3,772,597**

[45] **Nov. 13, 1973**

[54] **CODE TRANSMISSION SYSTEM**

[75] Inventor: **Harris A. Stover,** Cedar Rapids, Iowa

[73] Assignee: **Collins Radio Company,** Dallas, Tex.

[22] Filed: **May 19, 1972**

[21] Appl. No.: **255,200**

[52] **U.S. Cl.** ..... **325/38 R,** 340/365, 178/17 C

[51] **Int. Cl.** **H04b 1/00**

[58] **Field of Search** ..... 325/38 R; 340/365; 178/17 C, 81, 17.5; 179/90 K; 200/5 R, 5 A, 6 A

[56] **References Cited**

UNITED STATES PATENTS

3,457,368	7/1969	Houcke	178/17.5 X
3,308,918	3/1967	James	178/17 C
3,673,357	6/1972	Molchan	200/5 A
3,227,820	1/1966	Sorenson	200/5 A
2,957,952	10/1960	Jaeger	179/90 K
3,596,181	7/1971	Dowling et al.	178/17 C

Primary Examiner—Charles D. Miller
Attorney—Richard W. Anderson et al.

[57] **ABSTRACT**

A code transmission means comprising a compact keyboard of multi-functional keys and binary code word generation means compatible with handheld communication sets. Stored multibit code words for key selected symbols to be transmitted are addressed out of storage memory to provide time synchronous bit-rate code word modulation of a transmitter in automatic sequence following keyboard symbol selection. A teleprinter code transmission system is exemplifid.
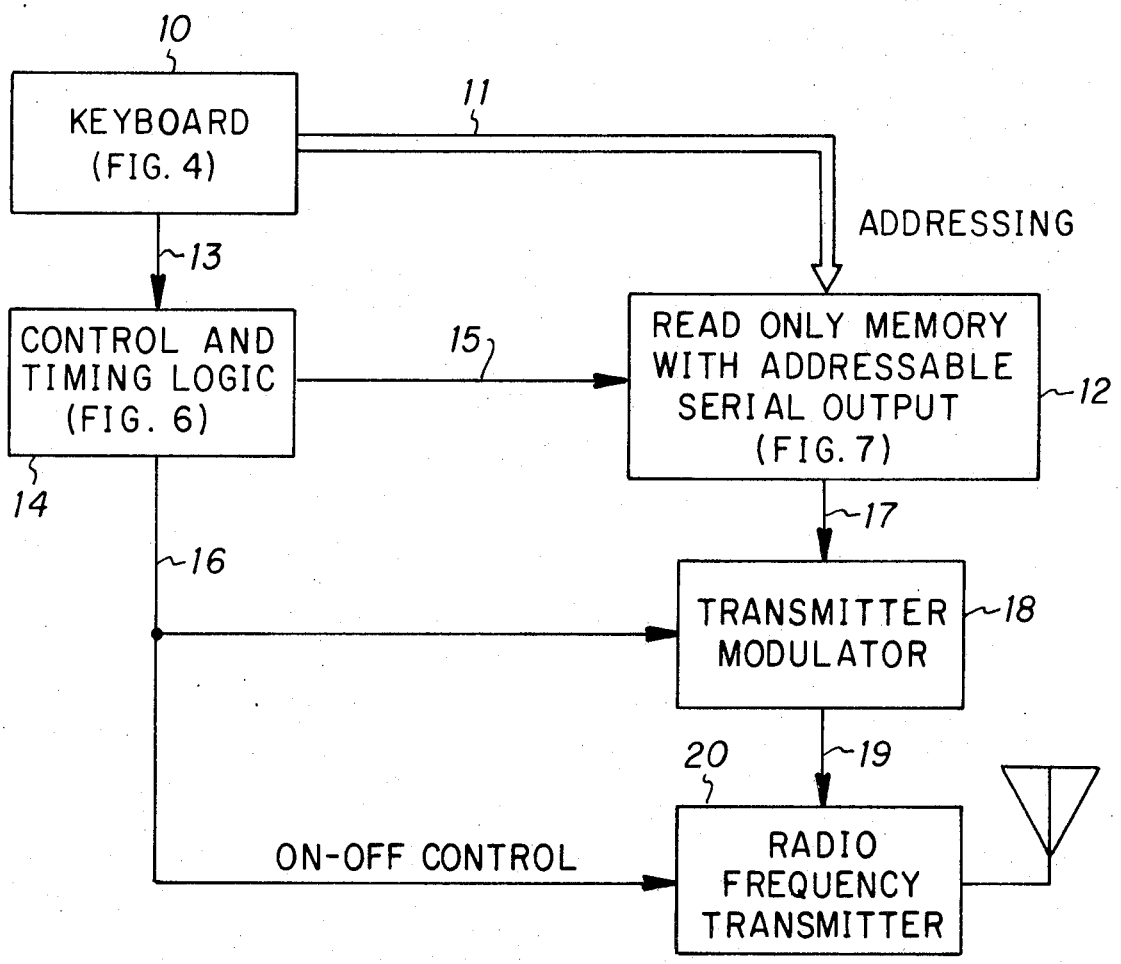
4 Claims, 10 Drawing Figures