United States Patent [19]

Schlegel

[11] **4,172,297**

[45] **Oct. 30, 1979**

[54] **ARTIFICIAL IMPLANT LENS**

[75] Inventor: **Hans-Joachim Schlegel**, Bad Homburg, Fed. Rep. of Germany

[73] Assignee: **Inprohold Establishment**, Vaduz, Liechtenstein

[21] Appl. No.: **887,041**

[22] Filed: **Mar. 16, 1978**

Related U.S. Application Data

[63] Continuation-in-part of Ser. No. 691,712, Jun. 7, 1976, abandoned.

[30] **Foreign Application Priority Data**

Feb. 24, 1976 [DE] Fed. Rep. of Germany 2607462
Dec. 30, 1977 [DE] Fed. Rep. of Germany 2758912

[51] **Int. Cl.**[2] **A61F 1/16**; A61F 1/24
[52] **U.S. Cl.** **3/13**
[58] **Field of Search** 3/13, 1

[56] **References Cited**

U.S. PATENT DOCUMENTS

2,834,023	5/1958	Lieb	3/13 UX
3,228,741	1/1966	Becker	3/13 X
3,711,870	1/1973	Deitrick	3/13
3,906,551	9/1975	Otter	3/13
3,971,073	7/1976	Richards et al.	3/13
3,979,780	9/1976	Boniuk	3/13
3,996,627	12/1976	Deeg et al.	3/13

OTHER PUBLICATIONS

"Artiphakia and Aniseikonia" by Richard C. Troutman, American Journal of Ophthalmology, vol. 56, No. 2, Oct. 1963, pp. 630–632.

"A Weightless Iseikonic Intraocular Lens" by Richard D. Binkhorst et al., American Journal of Ophthalmology, vol. 58, No. 1, Jul. 1964, pp. 73–78.

"Optical Properties of Buried Corneal Silicone Prosthesis" by D. Miller et al., American Journal of Ophthalmology, vol. 66, No. 4, Oct. 1968, pp. 633–640.

Primary Examiner—Ronald L. Frinks
Attorney, Agent, or Firm—Erwin S. Teltscher

[57] **ABSTRACT**

An artificial implant lens for the eye of a living being has a central lens body and front and rear annular discs surrounding the lens body. The annular discs overlap the iris and secure the lens to the iris.
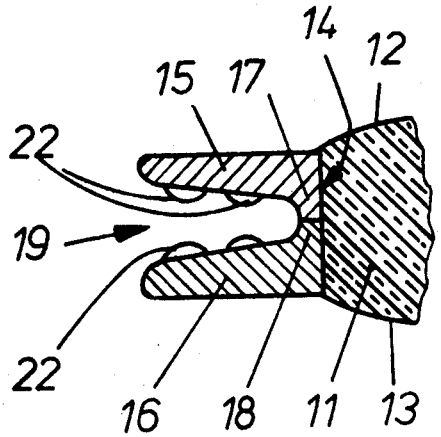
28 Claims, 11 Drawing Figures