# United States Patent [19]

**Cumming**

[11] **Patent Number: 5,066,297**

[45] **Date of Patent: Nov. 19, 1991**


[54] **INTRAOCULAR LENS INSERTION DEVICE**


[76] Inventor: **J. Stuart Cumming**, 1211 W. LaPalma Ave., #201, Anaheim, Calif. 92801



[21] Appl. No.: **560,094**

[22] Filed: **Jul. 30, 1990**

**Related U.S. Application Data**

[62] Division of Ser. No. 298,925, Jan. 23, 1989, Pat. No. 4,976,716.

[51] **Int. Cl.**[5] ..... **A61B 17/00**

[52] **U.S. Cl.** ..... **606/107**

[58] **Field of Search** ..... 606/107



[56] **References Cited**

U.S. PATENT DOCUMENTS

4,715,373 12/1987 Mazzocco et al. ..... 606/107

4,934,363 6/1990 Smith et al. ..... 606/107



*Primary Examiner*—Michael H. Thaler

*Attorney, Agent, or Firm*—Boniard I. Brown



[57] **ABSTRACT**

An improved surgical instrument having lens gripping fingers straddled by backup fingers for implanting a foldable intraocular lens in a patient's eye by (a) closing the backup fingers to close the gripping fingers with an unfolded lens positioned between slender tip portions of the gripping fingers in such a way that the lens is folded and gripped between the tip portions, (b) inserting the gripping finger tip portions and the folded lens into the eye thru a corneal incision, (c) extending the gripping fingers beyond the backup fingers and further into the eye to free the tip portions for gradual separation by the elastic strain energy in the folded lens and thereby free the lens to gradually unfold, (d) pushing the unfolding lens from the gripping fingers to release the lens to unfold to its normal lens configuration within the eye, and (e) retracting the gripping fingers relative to the backup fingers and then withdrawing the instrument from the eye. The preferred surgical instrument embodies a disposable lens insertion capsule assembly including the lens gripping fingers and a reusable capsule holder including the backup fingers. A surgical aid in the form of a sterilizable instrument package containing a tray supporting an unfolded lens to be implanted and either the complete surgical instrument or the insertion capsule assembly only with which the capsule holder is engagable on the tray to form the complete instrument after the package is opened.

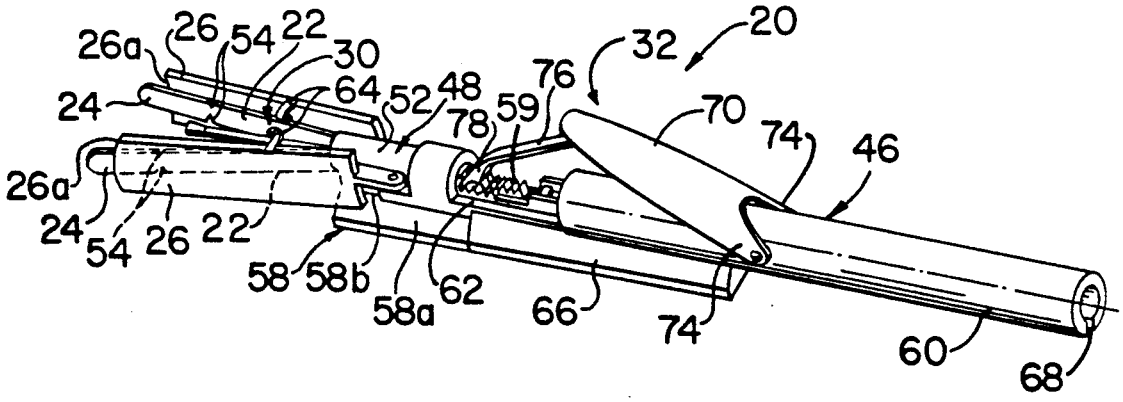
**6 Claims, 5 Drawing Sheets**