US005254097A

United States Patent [19]

Schock et al.

[11] Patent Number: 5,254,097

[45] Date of Patent: Oct. 19, 1993

[54] COMBINED PERCUTANEOUS CARDIOPULMONARY BYPASS (PBY) AND INTRA-AORTIC BALLOON (IAB) ACCESS CANNULA

[75] Inventors: **Robert B. Schock; John J. Lucas,** both of Sparta; **William C. Corrigan, Jr.,** Randolph; **Manuel L. Capinpin,** Bayonne, all of N.J.

[73] Assignee: **Datascope Investment Corp.,** Montvale, N.J.

[21] Appl. No.: **817,399**

[22] Filed: **Jan. 6, 1992**

[51] **Int. Cl.**[5] **A61M 5/178**

[52] **U.S. Cl.** **604/167;** 604/256; 604/284

[58] **Field of Search** 604/284, 83, 86, 247, 604/256, 167, 169

[56] **References Cited**

U.S. PATENT DOCUMENTS

4,000,739	1/1977	Stevens	128/214.4
4,121,585	10/1978	Becker, Jr.	604/86
4,122,858	10/1978	Schiff	128/348
4,197,848	4/1980	Garrett	604/83 X
4,261,339	4/1981	Hanson et al.	128/1 D
4,287,892	9/1981	Schiff	128/349 B
4,327,709	5/1982	Hanson et al.	128/1 D
4,596,557	6/1986	Pexa	604/284
4,804,365	2/1989	Litzie et al.	604/4
5,098,385	3/1992	Walsh	604/256 X

OTHER PUBLICATIONS

Bavaria, Effect of Circulatory Assist Devices on Stunned Myocardium, Ann. Thorac. Sug., 49:123-128 (1990).

Phillips, Percutaneous Cardiopulmonary Bypass and Innovations in Clinical Counterpulsation, Critical Care Clinics, vol. 2, No. 2 (Apr. 1986).

Check-Flo ® II Introducer Sets, Copyright Cook, Inc., 1989.

Cordis Sheath Introducers, Cordis Corporation, Dec. 1988.

Primary Examiner—John D. Yasko

Attorney, Agent, or Firm—Fitzpatrick, Cella, Harper & Scinto

[57] **ABSTRACT**

A cannula for performing two or more medical procedures either individually, seriatim or simultaneously, for example, combined percutaneous PBY and IAB procedures, which cannula includes a body having a common leg and two or more access port legs (e.g. a Y-shaped body), one access port for performing one procedure, a second access port for performing a second procedure, and hemostasis structure. A smooth continuous blood flow path is formed by a common lumen of a common leg of the cannula body and a primary lumen formed in a primary access port leg of the cannula body. The secondary access port legs are provided with secondary lumens that communicate with the common lumen.
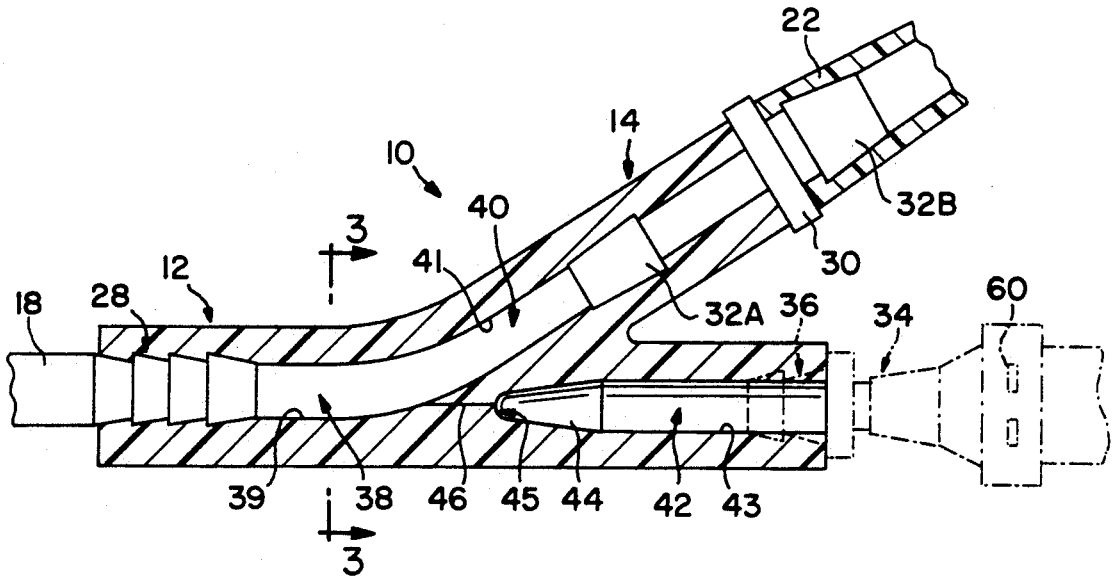
53 Claims, 3 Drawing Sheets