US008553397B2

(12) **United States Patent**
Alameh et al.

(10) **Patent No.: US 8,553,397 B2**
(45) **Date of Patent: Oct. 8, 2013**

(54) **METHOD AND APPARATUS FOR COUPLING PORTABLE COMMUNICATION DEVICES**

(75) Inventors: **Rachid Alameh**, Crystal Lake, IL (US); **William Hede**, Lake in the Hills, IL (US); **Paul Steuer**, Hawthorn Woods, IL (US)

(73) Assignee: **Motorola Mobility LLC**, Libertyville, IL (US)

(*) Notice: Subject to any disclaimer, the term of this patent is extended or adjusted under 35 U.S.C. 154(b) by 228 days.

(21) Appl. No.: **13/098,446**

(22) Filed: **Apr. 30, 2011**

(65) **Prior Publication Data**

US 2012/0275089 A1 Nov. 1, 2012

(51) **Int. Cl.**
H05K 5/00 (2006.01)
H05K 7/00 (2006.01)

(52) **U.S. Cl.**
USPC **361/679.01**

(58) **Field of Classification Search**
None
See application file for complete search history.

(56) **References Cited**

U.S. PATENT DOCUMENTS

5,177,784	A	1/1993	Hu et al.	
5,796,822	A	8/1998	Larson et al.	
D430,153	S	8/2000	Hino	
D430,559	S	9/2000	Hino	
6,256,193	B1 *	7/2001	Janik et al.	361/679.59
6,567,677	B1 *	5/2003	Sokoloff	455/575.1
6,728,557	B1 *	4/2004	Tracy et al.	455/575.3
6,758,303	B2	7/2004	Zurek et al.	
7,027,797	B2	4/2006	Mori	
7,098,897	B2	8/2006	Vakil	
7,151,912	B1	12/2006	Morrison	
7,215,538	B1 *	5/2007	Chen et al.	361/679.06
7,330,178	B2	2/2008	Yorio	
7,351,065	B1	4/2008	Merrell et al.	
7,374,425	B1 *	5/2008	Kuo et al.	439/31
7,512,429	B2 *	3/2009	Chan	455/575.3
7,539,526	B2 *	5/2009	Pirila et al.	455/575.3
7,580,726	B2 *	8/2009	Maatta et al.	455/550.1
8,046,037	B2 *	10/2011	Jang	455/575.4
2005/0026658	A1 *	2/2005	Soejima	455/575.1
2008/0132302	A1 *	6/2008	Schechtel et al.	455/575.4
2008/0146273	A1 *	6/2008	Otani et al.	455/556.1
2008/0186663	A1 *	8/2008	Chen	361/681
2009/0005131	A1 *	1/2009	Gitzinger et al.	455/575.3
2009/0258675	A1 *	10/2009	Okuda	455/556.1
2010/0188806	A1	7/2010	Mulford	

FOREIGN PATENT DOCUMENTS

GB	2364613	A	1/2002
JP	4153297	B2	9/2008

OTHER PUBLICATIONS

BrassBinnacle.com: Nickel Plated Brass Magnifying Glass on Stand; http://www.brassbinnacle.com/Merchant2/merchant.mvc?Screen . . . Jul. 14, 2010 (Copyright 2002-2010 BrassBinnacle.com).

* cited by examiner

Primary Examiner — Hoa C Nguyen
Assistant Examiner — Xanthia C Cunningham

(57) **ABSTRACT**

A method and apparatus mechanically couple portable communication devices. The apparatus can include a first shaft having a first shaft longitudinal axis, a first shaft length along the first shaft longitudinal axis, a first shaft end, and a second shaft end. The apparatus can include a first portable communication device having a first housing coupled to the first shaft end where the first housing rotates about an axis perpendicular to the first shaft longitudinal axis, the first housing having a first housing width. The apparatus can include a second portable communication device that can have a second portable communication device communication signal interface configured to communicate with a first portable communication device communication signal interface and can have a second housing that rotates about an axis perpendicular to the first shaft longitudinal axis. The first shaft length can be at least as long as the first housing width.
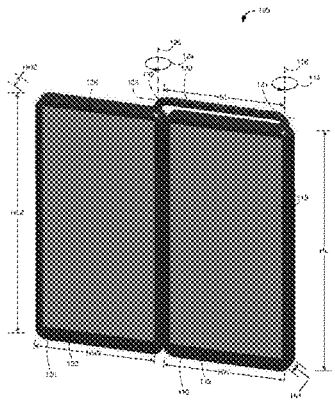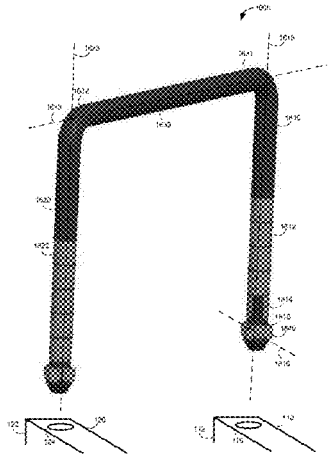
23 Claims, 17 Drawing Sheets